Hustler® Raptor® XD
Hustler® Raptor® XDX
Operator's Manual

SMOOTHTRAK™ STEERING

EN

HUSTLER®
ENGINEERING PERFORMANCE™

200 South Ridge Road
Hesston, Kansas
67062

607855CE REV A

Manual version

Original Instructions in English

Hustler® Turf Equipment Authorized Representative

Southern Machinery LTD
Downings South, Prosperous NAAS
Co. Kildare IRL ---
Telephone: +353 45 86 0031
www.southernmachinery.ie
Email: gtutty@eircom.net

EN

Excel Industries, Inc.

Manufacturer of Hustler® Turf Equipment

200 South Ridge Road
Hesston, Kansas 67062
Telephone: (620) 327-4911
FAX: (620) 327-2828

TABLE OF CONTENTS

General Information 1-1

- To the New Owner 1-1
- Using This Manual 1-1
- Warranty Registration 1-1
- Model and Serial Number 1-1
- Parts and Service 1-2
- Product Literature 1-2

Safety Precautions 2-1

- Safe Operating Practices 2-1
- Service Precautions 2-4
- Safety and Instructions Decals 2-6

Operation 3-1

- Safe Operating Practices 3-1
- Control Panel 3-1
- Controls 3-1
- Safety Start Interlock System 3-2
- Engine Starting 3-2
- Stopping the Engine 3-3
- Moving the Mower With Stalled Engine 3-3
- Mower Operation 3-3
- Deck Cutting Height Adjustment 3-7
- Anti-Scalp Wheels 3-7

Maintenance & Adjustments 4-1

- Safe Servicing Practices 4-1
- Service Introduction 4-1
- Torque Values 4-1
- Tires 4-1
- Flex Forks Break-In 4-1
- Lubrication 4-1
- Electrical System 4-1
- Hydraulic System 4-2
- Fuel Evaporation System Filter 4-4
- Engine Oil and Filter 4-4
- Engine Air Filter 4-4
- General Engine Maintenance 4-5
- Belts 4-5
- Mower Blades 4-5
- Seat Adjustment 4-7
- Steering Control Lever Adjustment 4-7
- Maintenance Record 4-12

EN

Troubleshooting 5-1

Storage. 6-1

Technical Specifications 7-1

EN

GENERAL INFORMATION

This manual applies to the following Hustler® Turf Equipment equipment lines:

Hustler® Raptor® XD
Hustler® Raptor® XDX

To the New Owner

Hustler® Raptor® XD and Hustler® Raptor® XDX mowers are designed to be used as riding lawn mowers, they must be used for mowing purposes only.

Hustler® mower owners and operators **must read** this manual carefully. It contains operation and maintenance information that will help you achieve years of dependable service.

The Engine Owner's Manual, included in the owner's packet, contains engine information that will not be repeated in this manual.

The **owner's responsibilities** include, but are not limited to, making certain that the operators and mechanics:

- read and understand the engine owner's manual before attempting to operate or repair the engine.
- read and understand the mower's operator manual and all decals before operating this machine.
- are qualified and physically able individuals, properly trained in the operation and maintenance of this equipment. Before they are allowed to operate or maintain this machine, they **must** be familiar with its safe operation, operator controls, and decals.
- know they are responsible for their own safety as well as the safety of other persons within the vicinity. **Remember,** the operator is responsible for accidents or hazards occurring to other people or their property.

IMPORTANT: As the owner/operator you can prevent accidents. You are responsible for accidents or injuries occurring to yourself, other people or property.

Never let children or untrained people operate or service the equipment. Local regulations may restrict the age of the operator.

For more detailed maintenance and adjustment information refer to the proper *General Service Manual* for your machine. Refer to the *Product Literature* section of this manual for information on how to obtain this manual.

Using This Manual

IMPORTANT: Any maintenance operation that requires the removal of safety covers **must** be performed by a trained service technician.

This manual contains general operation information as well as basic adjustment and maintenance information. Since operating conditions vary considerably, all conditions cannot be addressed individually. Through training and experience, operators should develop safe operating practices suitable to most conditions.

Directions used in this manual, for example RIGHT or LEFT, refer to directions when in the operator position and facing forward, unless otherwise stated.

Though current at the time of printing, photographs and illustrations shown may vary slightly from your mower due to subsequent production changes. Hustler® Turf Equipment, Inc. reserves the right to redesign and change the machine as deemed necessary, without notification. If a change has been made to your machine which is not reflected in this manual, contact your Hustler® Dealer for current information.

EN

Warranty Registration

There are several ways to register the mower with Hustler® Turf Equipment:

- **Hustler® Dealers must** register the unit on-line at **https://dealer.hustlerturf.com** within **ten (10) days** following date of purchase.

As the new equipment owner, you should confirm that your mower has been registered with Hustler® Turf Equipment.

IMPORTANT: The mower and any attachment that displays a model and serial identification number plate **must** be registered with Excel Industries, Inc., manufacturer of Hustler® Turf Equipment, Inc ("Manufacturer").

IMPORTANT: Any unauthorized modification, alteration, or use of non-approved attachments voids the warranty and releases Manufacturer from any liability arising from subsequent use of this equipment. **Do not** use or operate any attachment not approved by Hustler® Turf Equipment, Inc.

IMPORTANT: Damage caused by unauthorized replacement parts is not covered by this warranty. Manufacturer expressly excludes liability for defects or damage caused by such 'unauthorized' articles or service.

Model and Serial Number

Mower model and serial numbers are found on the serial identification plate, located on the left mower frame side rail.

These numbers are required when the unit is registered with Hustler® Turf Equipment. They will also assure you of the correct service parts when replacement becomes necessary.

Shown below is an example of a serial identification plate and how to interpret it.



A. Year 2011 **B.** Month - January **C.** Serial number	**D.** Weight of machine without operator **E.** Engine power rating **F.** Engine RPM setting

Figure 1-1

EN

Parts and Service

Use original Hustler® replacement parts, or parts that are equivalent in overall performance, that are available from your local Hustler® Dealer. For prompt, efficient service, always provide the following information when ordering parts:

1. Correct part description.
2. Correct part number.
3. Correct model number.
4. Correct serial number.

All arrangements for warranty repair and service must be handled through an authorized Hustler® Dealer.

Product Literature

If you would like to view or print a copy of this manual go online to www.hustlerturf.com.

Contact your local Hustler® Dealer if you require another engine owner's manual.

SAFETY PRECAUTIONS



This safety alert symbol is used to call attention to a message intended to provide a reasonable degree of **PERSONAL SAFETY** for operators and other persons during the normal operation and servicing of this equipment.

DANGER — denotes immediate hazards which **WILL** result in severe personal injury or death.

WARNING — denotes a hazard or unsafe practice which **COULD** result in severe personal injury or death.

This manual uses two other words to highlight information:

A. IMPORTANT — calls attention to special mechanical information.

B. NOTE — emphasizes general information worthy of special attention.

The **owner's responsibilities** include, but are not limited to,

- making certain that the operators and mechanics read and understand this manual and all decals before operating this machine.
- making certain that before the operators and mechanics are allowed to operate or maintain this machine, they **must** be familiar with its safe operation, operator controls, and decals.
- ensuring that the operators and mechanics know they are responsible for their own safety as well as the safety of other persons within the vicinity. **Remember,** the operator is responsible for accidents or hazards occurring to other people or their property.

Improper use, adjustment, or maintenance by the operator, mechanic or owner can result in injury or death. Reduce the potential for injuries by following these safety instructions. Pay close attention to the safety alert symbol "▲" and the instructions that follow it. **Failure to comply with these instructions may result in personal injury or death.**

Incorrect usage of this equipment may result in severe injury or death. Personnel operating and maintaining it should be trained in its proper use. They should read this manual completely and thoroughly before attempting to set-up, operate, adjust, or service this equipment.

Safe Operating Practices

Refer to the *Safety Precautions* section of this manual for operational and personal safety information.

Safe Operation

▲ Evaluate the terrain to determine what accessories and attachments are needed to properly and safely perform the job. Only use accessories and attachments approved by the manufacturer.

- Do not use any unauthorized attachment or modify the mower.
- Follow the manufacturer's recommendation for wheel weights or counterweights.
- If any attachment or additional weight is mounted on the rear of the unit, any rapid movement of the control levers in either direction could result in a reaction of the mower that can cause serious injury.

▲ **Do not** use a catcher on any mower equipped with Flex Forks®.

▲ Always be alert and inspect area to be mowed for hazards such as rocks, metal objects and other debris which may be thrown or entangled by mower blades. Remove these objects before mowing. Watch out for holes or deep depressions.

▲ Always operate mower in daylight or with adequate working lights.

▲ Never operate the mower when there is a risk for lightning.

Personal Safety

▲ **Always** wear long pants and safety shoes with slip-resistant soles when operating this mower.

- Do not wear sandals, tennis shoes, sneakers, shorts or any type of loose fitting clothing as they may get tangled in moving parts.
- Do not wear a towel from the waist, or use a towel as a headband or neck wrap.
- Long hair or jewelry may get tangled in moving parts.

▲ Always wear adequate ear protection, such as earplugs. Prolonged exposure to loud noise can cause impairment or loss of hearing.

- Do not wear radios or music headphones while operating this mower. Safe operation requires your full attention.

EN

- **Always** wear safety goggles or safety glasses with side shields when operating this mower.
- Do not operate the mower if you are fatigued, sick or while under the influence of alcohol or drugs, if you are pregnant or under 18 years old.
- Poor posture or operating the mower for extended periods of time may lead to fatigue or injury, resulting in loss of mower control. Occasionally, stop the mower and get off the seat to stretch and relax.
- Always be aware of abnormal mower vibration. Prolonged exposure to excessive mower vibration can lead to discomfort, low-back morbidity, neurological, osteo-articular and vascular disorders, and/or trauma to the spine.
- Data indicates that operators aged 60 years and above are involved in a large percentage of riding mower-related injuries. These operators should evaluate their ability to operate the mower safely enough to protect themselves and others from serious injury.

EN

Operation

- Never leave a running mower unattended. Before leaving the operator's seat for any reason, including emptying the catcher or unclogging the chute:
  - Always stop on level ground.
  - Disengage the deck clutch.
  - Place the steering control levers in the park brake position.
  - Stop the engine.
  - Remove the ignition key.
  - Wait for the engine and all moving parts to come to a complete stop.
- Always inspect mower for damage after striking a foreign object. If damage is found, repair mower immediately.
- Always remain seated while operating the mower. Only start the engine from the operator's position.
- Turn off the mower blades when not mowing.
- Always keep safety shields and covers in place, except for servicing.
  - Never operate the machine with the floor plate pulley cover removed.
- Never operate the mower deck with the discharge chute damaged, altered, removed, or in the raised position, except when the entire grass catcher attachment or mulching system is being used.
- Always keep clear of the mower blades and attachments during their operation.
  - Never put hands or feet under any part of the mower while it is running.
- Stop the engine before removing the grass catcher or unclogging the discharge chute. Never clear the discharge chute with the engine running. Turn off the engine and be sure the blades have stopped before cleaning. Use a stick to clear a plugged discharge area. **Never use your hand!**
- Follow daily and weekly checklists, making sure hoses are tightly secured and bolts are tightened.
  - Never operate a poorly maintained mower.
- **Clean flammable material from mower. Prevent fires by keeping the engine compartment, top of the deck, exhaust area, battery, fuel line, fuel tank and operator's station clean of accumulated trash, grass clippings, and other debris. Always clean up spilled fuel and oil.**
- **Prevent fires by keeping the engine and exhaust areas clear of grass clippings and other debris. Do not back mower into flammable materials.**
  - Allow the mower, especially the engine, to cool in a well ventilated area before storing inside a building or other enclosure.
- Do not change the engine governor setting or over speed the engine. Operating the engine at excessive speed may increase the hazard of personal injury.
- Rapid movement of the steering control levers in either direction could result in a reaction of the mower that can cause serious injury.
  - Never push forward suddenly on your steering control levers while the mower is in rearward motion because mower may tip backwards.
  - Never pull back suddenly on your steering control levers while the mower is in forward motion.
- Always be aware of what is behind the mower before backing up. Never mow in reverse. Always look down and behind before and while backing up.
  - If mowing in reverse is unavoidable, push forward slowly on the steering control levers and avoid sudden movement.
- Slow down before turning.
- Never attempt high speed maneuvering, especially in crowded or congested areas.
- Always maintain a safe distance from people and pets when mowing. Always stop mower if someone enters the area.
- Never carry passengers.
- Never direct discharged material toward anyone. Avoid discharging material against a wall or obstruction. Material may ricochet back toward the operator. Always disengage the mower blades and wait for them to stop before crossing gravel drives, walks or roads.
- Always observe traffic laws while driving mower from one location to another. Watch for traffic when operating near or crossing roadways.
  - Use care when approaching blind corners, shrubs, trees, or other objects that may obscure your vision.

▲ Do not tow the machine. Move it by hand or use a winch to load on a trailer for transporting. When transporting on another vehicle, the mower should be facing forward and it must be secured.

▲ Secure frame to transport vehicle with at least two straps, chains, cables, or ropes. Never secure unit from rods or linkages to vehicle, otherwise damage could occur.

Using a Ramp

▲ Exercise extreme caution when loading and unloading a mower onto a truck or trailer with a ramp.

▲ Use only a single, full width ramp; do not use individual ramps for each side of the unit. Having a full width ramp provides a surface for the mower frame to contact if the unit starts to tip backwards. It also reduces the risk of a wheel going off and the mower tipping over.

▲ Do not exceed a 15 degree angle between the ramp and the ground or between the ramp and the trailer or truck.

▲ Avoid sudden acceleration when on a ramp.

Slope Operation

Slopes are a major factor in loss-of-control and tip-over accidents, which can result in severe injury or death. All slopes require extra caution. If you cannot back the mower up the slope or if you feel uneasy on the slope; do not mow it. REMINDER: Only operate on slopes of 15 degrees or less.

▲ Use extreme caution when operating on slopes.

- Be extremely careful changing directions on a slope. Slow down.
- Do not operate where the mower could slip or tip.
- Turn slowly
- Turn on the most level part of the slope
- To maximize traction, it is better to turn the front of the mower uphill, rather than downhill. **If drive tires lose traction, steering control is lost which could cause serious injury or death.**
- If it becomes necessary to turn downhill, turn slowly and gradually, if possible.

▲ Watch for holes, ruts, bumps, rocks or other hidden objects. Uneven terrain could overturn the mower. Tall grass can hide obstacles.

▲ Remove obstacles such as rocks, tree limbs, etc.

▲ Keep all movement on slopes slow and gradual. Do not make sudden changes in speed or direction.

▲ Avoid starting and stopping on a slope. If tires lose traction, disengage the mower blades and proceed slowly straight down the slope.

▲ Operate a safe distance (minimum of 10 feet) away from drop-offs, retaining walls, drainage ditches, embankments, water, and other types of hazards to avoid a wheel dropping over the edge or to avoid the ground from breaking away. This will reduce the risk of the mower suddenly rolling over causing serious injury or death.

▲ Use a walk behind, push mower or hand-held trimmer on slopes and near drop-offs, retaining walls, drainage ditches, embankments and water to avoid mower rollover and serious injury or death.

▲ Do not mow on wet grass. Slippery conditions reduce traction which could cause sliding and loss of steering control.

▲ Do not tow on slopes. The weight of the towed equipment may cause loss of traction and loss of steering control.

▲ Do not try to stabilize the mower by putting your foot on the ground.

▲ If the mower's tires lose traction when operating on slopes, disengage the blades, place the control levers in the park brake position, stop the engine, remove ignition switch key, and get help.

▲ Never make sudden starts, stops, turns, or reverse direction, especially when maneuvering on slopes. The steering is designed for sensitive response. Rapid movement of the control levers in either direction could result in a reaction of the mower that can cause serious injury.

▲ Never stop suddenly while backing down slopes. This action may result in a reaction of the mower that can cause serious physical injury.

▲ The Hustler® mower is capable of operating horizontally (traverse) on moderately steep slopes. When operating on slopes up to 15 degrees, be aware of any conditions that may cause the mower drive tires to lose traction resulting in a possible loss of control of the mower. An operator should not operate on a slope until he is thoroughly familiar with the equipment.

Do not operate on slopes greater than 15 degrees.

Refer to the *Slope Guide*, when determining the degree of slope to be mowed.

It is strongly recommended that the operator drive the mower off of the slope, using extreme caution, if any sign of loss of traction is detected. Wait until the condition that caused the problem is resolved before attempting to operate on the slope again.

Terrain conditions can affect traction resulting in possible loss of control of the mower. Some of the conditions to be aware of are:

- Wet terrain
- Depressions in the ground; i.e. holes, ruts, washouts
- Mounds of dirt
- Soil type; i.e. sand, loose dirt, gravel, clay
- Grass type, density, and height
- Extremely dry conditions of grass

EN

- Tire pressure

The attachments mounted to the mower will also affect the way it handles on a slope. Be aware that each attachment's characteristics vary.

Another consideration to safe mowing on slopes is to be aware of what is located at the bottom of the slope. Extreme caution should be used when there is a hazard located at the bottom of the slope. Some examples are:

- Water; i.e. lake, river
- Cliffs, retaining walls
- Roads, highways
- Buildings
- Rocks

These are just a few examples of situations when caution must be used when operating on a slope. There are many other possibilities too numerous to mention. Just remember to always exercise extreme caution when operating on any slope.

EN

Children

Tragic accidents can occur if the operator is not alert to the presence of children. Children are often attracted to the mower and the mowing activity. Never assume that children will remain where you last saw them.

- ▲ Never leave the mower unattended with the ignition key in the switch, especially with children present.
- ▲ Children or bystanders may be injured if they attempt to move or to operate the mower while it is unattended. Always disengage the deck clutch, place the control levers in park brake position, stop the engine, and remove the ignition key when leaving the operator's seat.
- ▲ Keep children out of the mowing area and under the watchful care of a responsible adult other than the operator.
- ▲ Be alert and turn the mower off if children enter the area.
- ▲ Before and while backing, look behind and down for small children.
- ▲ Never carry children, even with the blades off. They may fall off and be seriously injured or interfere with safe mower operation. Children who have been given rides in the past may suddenly appear in the mowing area for another ride and be run over or backed over by the mower.
- ▲ Never allow children to operate the mower.
- ▲ Never allow children or others in or on towed equipment.
- ▲ Use care when approaching blind corners, shrubs, trees, the end of a fence or other objects that may obscure vision.

Service Precautions

- ▲ Unless specifically required, **DO NOT** have the engine running when servicing or making adjustments to the mower.
  - Park the mower on level ground.
  - Disengage the deck clutch.
  - Place the steering control levers in the park brake position.
  - Lower the deck.
  - Stop the engine.
  - Remove the ignition key.
  - Disconnect the negative battery cable.
  - Wait for all movement to stop before adjusting, cleaning or repairing.
  - Repairs or maintenance requiring engine power should be performed by trained maintenance personnel only.
  - To prevent carbon monoxide poisoning, operate the engine in a well ventilated area only.
  - Read and observe all safety warnings in this manual.
- ▲ Before working on or under the deck, make certain the engine cannot be accidentally started.
- ▲ **Always** keep belt covers on mower deck for safety as well as for cleanliness except when changing or checking the belt.
- ▲ Use a stick or similar instrument to clean under the mower making sure that no part of the body, especially arms and hands are under the mower.
- ▲ Always wear adequate eye protection when:
  - servicing the hydraulic system.
  - servicing the battery.
  - grinding mower blades and removing accumulated debris.
- ▲ Never attempt to make any adjustments or repairs to the mower drive system, mower deck or any attachment while the mower engine is running or deck clutch is engaged. Repairs or maintenance requiring engine power should be performed by trained maintenance personnel only.
- ▲ Never work under the machine or attachment unless it is safely supported with jack stands.
  - Make certain machine is secure when it is raised and placed on the jack stands.
  - The jack stands should not allow the machine to move when the engine is running and the drive wheels are rotating.
  - **Use only certified jack stands.** Use only appropriate jack stands, with a minimum weight rating of 907 kg to block the unit up.
  - Use in pairs only.

- Follow the instructions supplied with the jack stands.

▲ Exercise caution when releasing spring tension from any of the belt idlers or when working with any of the deck lift components.

▲ Do not touch hot parts of machine.

▲ Keep nuts and bolts tight, especially the blade attachment bolts. Keep equipment in good working condition.

▲ Never tamper with safety devices. Check their proper operation regularly.

▲ Grass collection system components are subject to wear, damage and deterioration, which could expose moving parts or allow objects to be thrown. Frequently check components and replace with manufacturer's recommended parts, when necessary.

▲ Exercise caution when working under the deck as the mower blades are extremely sharp. Wrap the blade(s) or wear gloves and use extra caution when servicing them.

▲ Use original Hustler® replacement parts, or parts that are equivalent in overall performance, that are available from your local Hustler® Dealer.

- The mower may not comply with the appropriate safety standards if aftermarket parts, accessories, or attachments are used.

Mower Blade Maintenance Precautions

▲ Never attempt to straighten a bent blade by heating, or weld a cracked or broken blade as the blade may break and cause serious injury. Replace worn or damaged blades.

▲ Never work with blades while engine is running or deck clutch switch is engaged (on).

▲ Always wear adequate eye protection when grinding mower blades.

▲ Mower blades are sharp and can cut. Wrap the blade(s) or wear gloves and use extra caution when servicing them.

Battery Service Precautions

▲ Battery posts, terminals, and related accessories contain lead and lead compounds, chemicals known to the State of California to cause cancer and reproductive harm. Wash hands after handling.

▲ Charge batteries in a well-ventilated open area, away from sparks and flames. Unplug charger before connecting or disconnecting from battery. Wear protective clothing and use insulated tools.

▲ Avoid skin and clothing contact with battery acid.

- Always wear eye protection when checking the battery. Acid can cause serious injury to skin and eyes. If contact occurs, flush area with clean water and call a physician immediately. Acid will also damage clothing.
- Do not drink the battery electrolyte.
- Do not allow open flame near the battery when charging.
- Hydrogen gas forms inside the battery. This gas is both toxic and flammable and may cause an explosion if exposed to flame. Always **disconnect** the negative (black) battery cable(s) before disconnecting the positive (red) cable(s). Always **connect** the positive (red) battery cable(s) before connecting the negative (black) cable(s).
- Do not overfill the battery.
- Electrolyte may overflow and damage paint, wiring or structure. When cleaning the battery, use soap and water. Be careful not to get soap and water into the battery. Clean the battery terminals with a solution of four parts water and one part baking soda when they become corroded.

▲ Shorts caused by battery terminals or metal tools touching metal mower components can cause sparks. Sparks can cause a battery gas explosion which will result in personal injury.

- Prevent the battery terminals from touching any metal mower parts when removing or installing the battery.
- Do not allow metal tools to short between the battery terminals and metal mower parts.

▲ Incorrect battery cable routing could cause damage to the mower and battery cables. This can cause sparks which can cause a battery gas explosion which will result in personal injury.

- Always **disconnect** the negative (black) battery cable(s) before disconnecting the positive (red) cable(s).
- Always **connect** the positive (red) battery cable(s) before connecting the negative (black) cable(s).

Fuel Handling Precautions

▲ **To avoid personal injury or property damage, use extreme care when handling gasoline. Gasoline is extremely flammable and the vapors are explosive.**

- A fire or explosion from gasoline can burn you and others and can damage property.

▲ Observe the usual gasoline handling precautions:

- Do not smoke while refueling. Extinguish all cigarettes, cigars, pipes and other sources of ignition.
- **Do not remove fuel cap or fill tank with engine running or while engine is hot.** Clean up any gasoline spills.
- If gasoline is spilled, do not attempt to start the engine but move the machine away from the area of spillage and avoid creating any source of ignition until gasoline vapors have dissipated.

EN

- Keep gasoline away from open flame or spark and store machine away from open flame or spark or pilot light such as on a water heater or appliances.
- Refuel outdoors. Never refuel or drain the gasoline from the machine indoors, or while in an enclosed trailer or other enclosed area.
- Never attempt to start the engine when there is a strong odor of gasoline fumes present. Locate and correct the cause.
- Store gasoline in an approved container and keep it out of the reach of children. Never buy more than a 30-day supply of gasoline.
- Do not fill fuel containers inside a vehicle or on a truck or trailer bed with interior carpets or plastic truck bed liners. Always place gasoline containers on the ground away from your vehicle before filling.
- When practical, remove the machine from the truck or trailer and refuel the machine with its wheels on the ground. If this is not possible, then refuel such machine on the truck or trailer using a portable container and not a fuel dispenser nozzle. If a fuel dispenser nozzle must be used, keep the nozzle in contact with the rim of the fuel tank or container opening at all times until fueling is complete. Do not use a nozzle lock-open device.
- Never use gasoline for cleaning parts.
- Read and observe safety precautions elsewhere in this manual.

▲ Gasoline is harmful or fatal if swallowed.

▲ Avoid prolonged breathing of vapors.

- Long-term exposure to vapors can cause serious injury and illness.

▲ Keep gasoline away from eyes and skin.

- Keep face away from nozzle and fuel tank or fuel container opening.
- If gasoline is spilled on clothing, change clothing immediately.

Safety and Instructions Decals

The decals are designed to give the operator and mechanic brief daily operational and service information. Use these decals as an extension of this manual. Do not remove or obliterate the decals. Replace unreadable or missing decals.

It is the **owner's responsibility** to make certain that the operators and mechanics read and understand all decals before operating this machine.

⚠ WARNING

Specific safety warning decals are located on the equipment near the immediate areas of potential hazards. Do not remove or obliterate these decals. Replace them if they become non-readable.

The following illustrations show the safety decals that are located on the mower. A brief explanation is shown to help the operator understand the decal's meaning.



- **Read Operator's Manual and Safety Warning Decals before attempting to operate this machine.**



- **Do not smoke while refueling.**
- **Do not remove the fuel tank cap or fill tank with engine running or while the engine is hot.**
- **Allow the mower, especially the engine, to cool in a well ventilated area before storing inside a building or other enclosure.**
- **Store away from open flame or spark if there is fuel in tank.**
- **Clean up any gasoline spills.**
- **Do not refuel while in enclosed trailer or other enclosed areas.**
- **Maximum of 10% ethanol (E10) in fuel. Fuels with greater than 10% ethanol, (such as E15, E20 and E85) voids warranty. Fuels with greater than 10% ethanol are not approved for use and such use could cause equipment failure and pose a fire hazard.**

Top of Deck Clutch Switch Shown

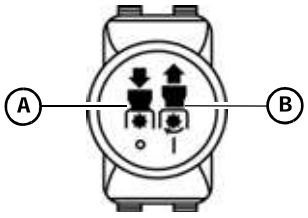

A. Deck clutch disengaged (OFF) position
B. Deck clutch engaged (ON) position

Part Number 789776CE

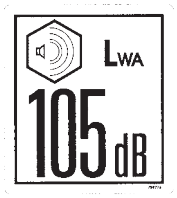

Part Number 794834CE



This label on your mower indicates that this model has been certified and is in compliance with European Directive 2000/14/EC.

Part Number 776310



This model is certified and is in compliance with European Directive 2006/42/EC.

Part Number 602562



Any maintenance operation that requires the removal of safety covers must be performed by a trained service technician.

Part Number 785139 & 785220

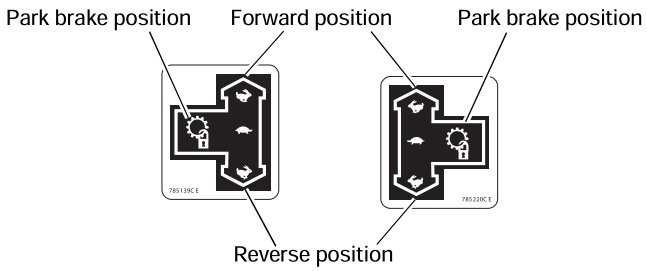

Part Number 602243

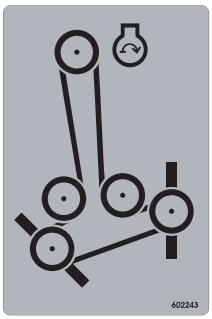

The information shown on this decal is to be used in conjunction with the following models:
Hustler® Raptor XD 939819CE

Part Number 781419

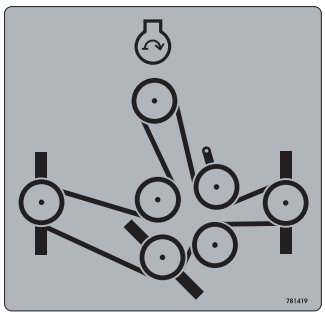

The information shown on this decal is to be used in conjunction with the following models:
Hustler® Raptor XD 940510CE
Hustler® Raptor XDX 941492CE
Hustler® Raptor XDX 941500CE
Hustler® Raptor XDX 941518CE



Part Number 602041

WARNING:
Hot surface!

- Keep a safe distance from the machine.



Part Number 600899

- If you lose steering control while operating the machine, place the steering control levers in the park brake position immediately. Inspect the machine and involve your dealer to resolve the problem before continuing to operate.
- If pump belt fails, steering control will be lost. Refer to owner's manual for inspection and replacement intervals and refer to above paragraph for emergency procedures.



WARNING: Fire!

Part Number 601967

- Clean flammable material from machine. Prevent fires by keeping engine compartment, top of deck, exhaust area, battery, fuel line, fuel tank and operator's station clean of accumulated trash, grass clippings, and other debris. Always clean up spilled fuel and oil.

EN

DANGER: Battery Hazards!

Part Number 601815

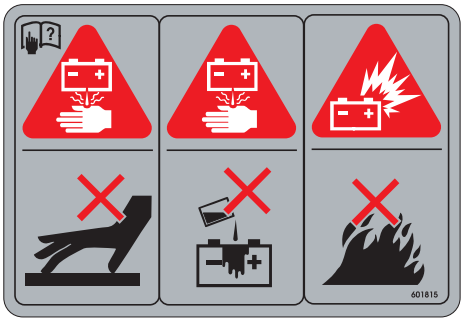

- Avoid skin contact with battery acid

- Do not overfill battery.
- Electrolyte may overflow and damage paint, wiring or structure. When cleaning the battery, use soap and water. Be careful not to get soap and water into the battery. Use soda mixed in water to clean corrosion off the terminals.
- Always wear eye protection when checking the battery, acid can cause serious injury to skin and eyes. If contact occurs, flush area with clean water and call physician immediately. Acid will also damage clothing.

- Do not allow open flame near the battery when charging.
- Hydrogen gas forms inside the battery. This gas is both toxic and flammable and may cause an explosion if exposed to flame. Always remove the negative ground first and replace it last.

EN

WARNING: Thrown objects!

- Never operate the mower deck with side deflector damaged, altered, removed or in raised position, except when the entire grass catcher attachment or mulching system is being used.

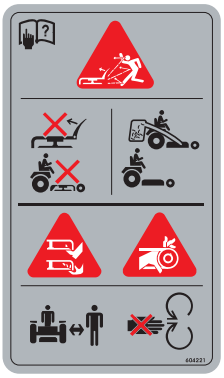

Part Number 604221

DANGER:
Rotating blades, pulleys & belts

- Keep shields and covers in place while machine is in operation.
- Keep hands, feet and clothing away from rotating pulleys and belts.



Part Number 601981

WARNING: Read Operator's Manual and decals before attempting to operate this machine.

WARNING: Roll over!

- Operate a safe distance (minimum of 10 feet) away from drop-offs, retaining walls, drainage ditches, embankments, water, and other types of hazards to avoid a wheel dropping over the edge or to avoid the ground from breaking away.

WARNING: Back over!

- Do not carry passengers.
- Always stop machine if someone enters the area.
- Always be aware of what is behind the machine before backing up. Do not mow in reverse unless absolutely necessary. Always look down and behind before and while backing up.

WARNING: Roll over!

- Slow down before turning.
- Do not operate on slopes greater than 15 degrees.
- Keep all movement on slopes slow and gradual. Never make sudden changes in speed and direction.
- Do not operate on slopes above a retaining wall or drop-off.

WARNING: Ejection!

- Do not operate on slopes greater than 15 degrees.
- Keep all movement slow and gradual when going up or down slopes.
- Do not remove or modify stabilizer wheels or injury can result.

WARNING: Loss of traction/control on slopes!

- Shut off blades.
- Back slowly down the slope when loss of traction occurs.

EN

Part Number 607973

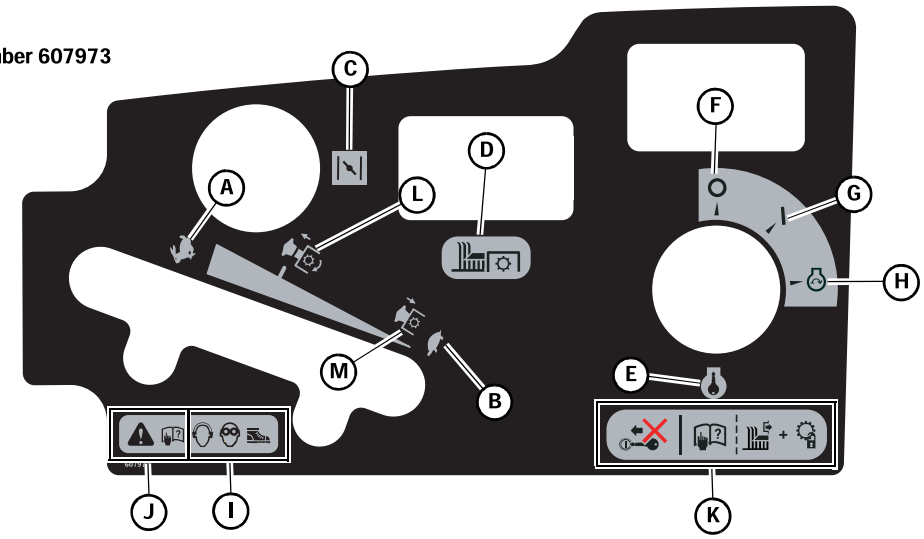

A. Fast
B. Slow
C. Choke
D. Mower blade engage/disengage switch
E. Ignition switch—insert key
F. OFF
G. ON
H. Engine start position
I. Wear ear protection, eye protection and safety shoes when operating this equipment.
J. Read Operator's Manual before attempting to operate this machine.
K. Before starting the engine:
- Read Owner's Manual.
- Disengage mower blades.
- Place control levers in park brake position.

L. For maximum electric clutch life engage at 1/2–3/4 throttle position.
M. For maximum electric clutch life disengage at low throttle position.

EN

Slope Guide

Use this diagram when determining the degree of slope to be mowed.

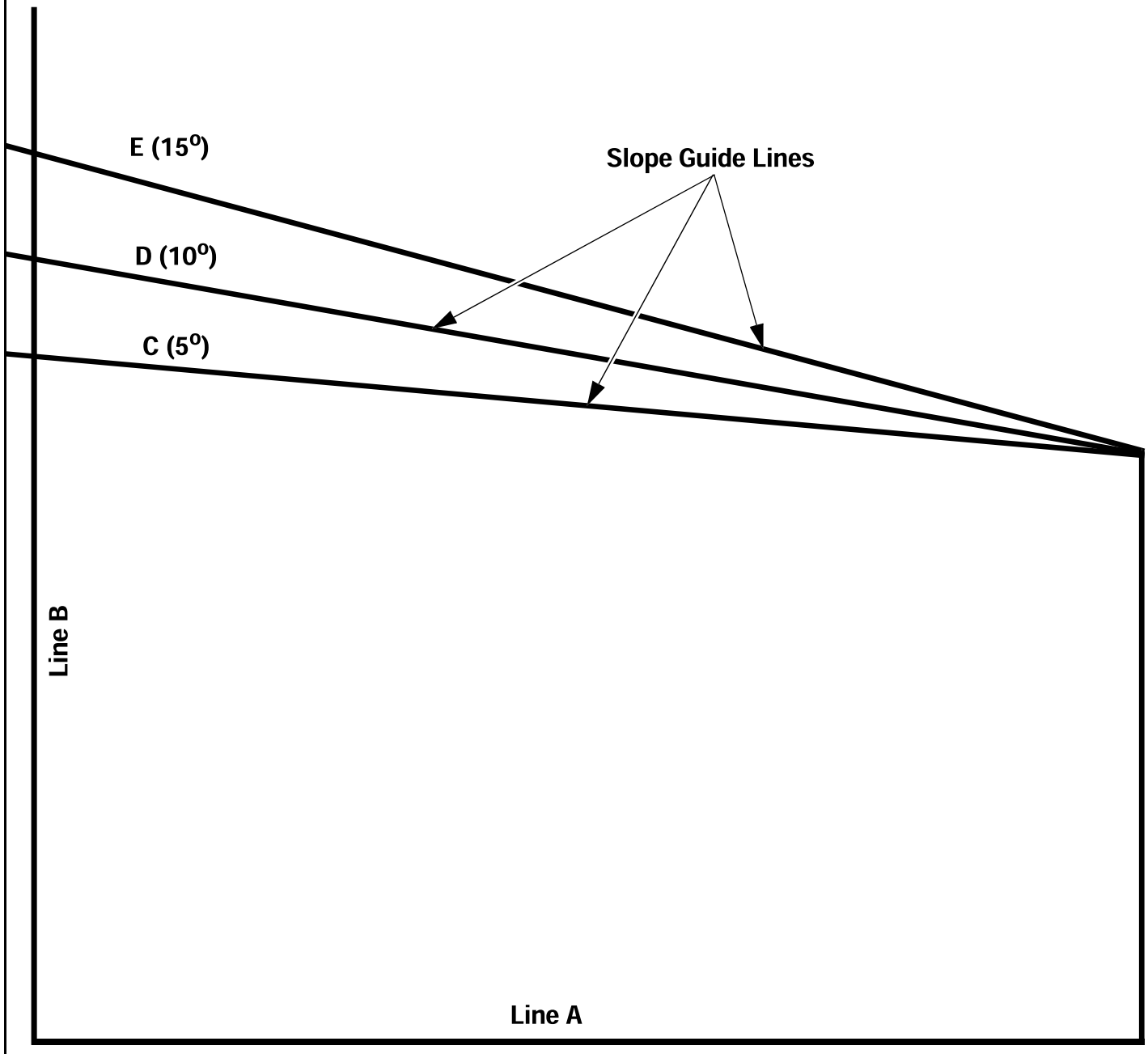

1. Hold this sheet of paper in front of you. Make sure that Line A is horizontal.
2. Align Line B with a vertical surface such as pole, tree or building.
3. Fold the paper along the slope guide lines (C, D or E).
4. Align the closest slope guide line with the ground slope. This will give you a close estimation of the ground slope to be mowed.

EN

EN

Safe Operating Practices

Refer to the *Safety Precautions* section of this manual for operational and personal safety information.

Control Panel

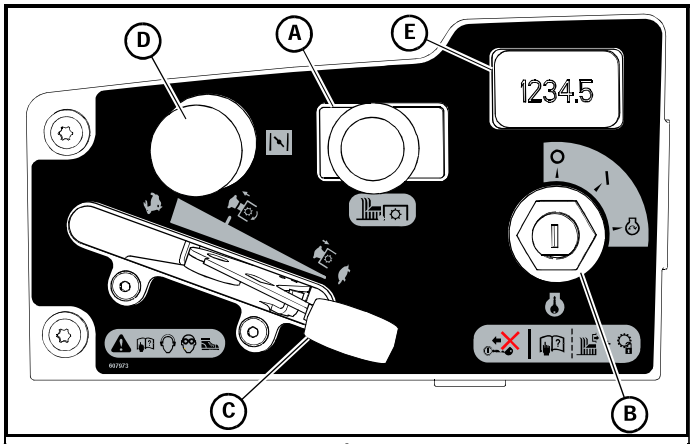

A. Deck clutch switch	**D.** Choke
B. Ignition switch	**E.** Hour meter
C. Throttle	

Figure 3-1

A. Deck clutch switch (Figure 3-1) — this switch engages the deck. Pull the switch up to engage and push the switch down to disengage the clutch.

For additional clutch information refer to the *Mower Deck Operation* section of this manual.

B. Ignition switch (Figure 3-1) — a three position switch: "OFF", "RUN", and "START". With the key inserted, rotate it clockwise to the "START" position; release the key when the engine starts, and the switch will automatically return to the "RUN" position

C. Throttle control (Figure 3-1) — a cable is linked to the engine throttle for controlling engine speed. Move the lever forward to increase engine rpm, move the lever rearward to decrease engine rpm.

D. Choke control (Figure 3-1) — a cable is linked to manually operate the engine choke. When the lever is in the down position, the choke is in the "OFF" (run) position. When the knob is pulled up, the choke is in the "ON" (start) position. **Do not** operate the machine in the "ON" (start) position.

E. Electronic hour meter (Figure 3-1) — registers 1/10 hour increments up to 9,999.9 total hours. Connected to the ignition switch, the meter records the accumulative time while the ignition key is switched to the RUN position.

Controls

A. Steering control levers (Figure 3-2 & Figure 3-3) — these levers control the mower's speed, direction, stopping, and park brake.

WARNING

The parking brake may not hold the mower if parked on a slope. Block or chock the machine when parked on a slope.

B. Deck lift pedal (Figure 3-4) — the deck lift pedal is used to raise or lower the deck. Push on the pedal to raise the deck and then place the adjusting pin into the desired cutting height hole. Release the pedal. Push the deck lift pedal to raise the deck when going over obstructions.

Shown with steering control levers in the neutral position

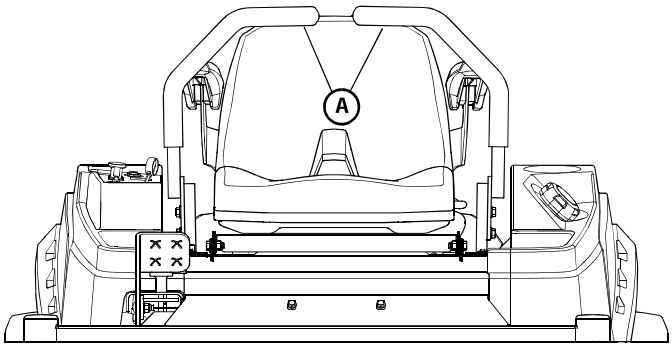

A. Steering control lever

Figure 3-2

Shown with steering control levers in the park brake position

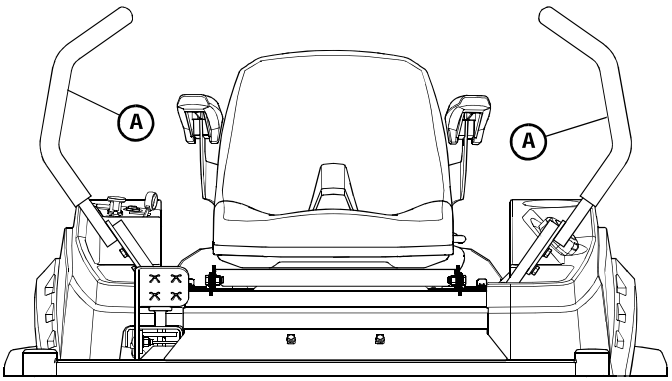

A. Steering control lever

Figure 3-3

EN

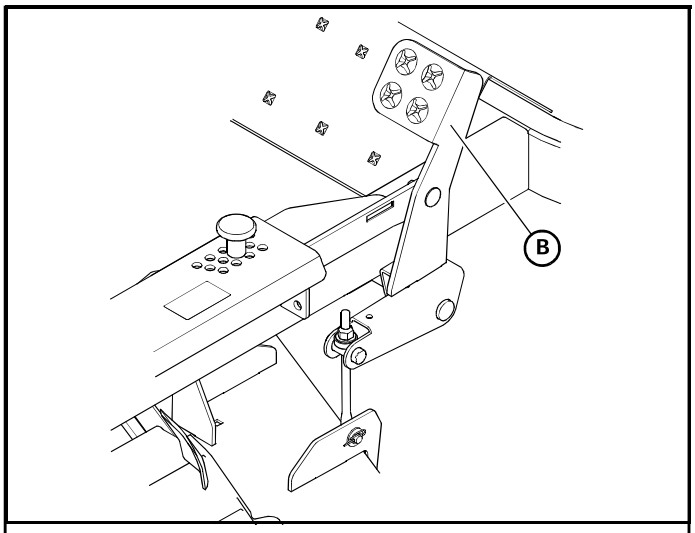

B. Deck lift pedal

Figure 3-4

EN

Safety Start Interlock System

The mower's safety start interlock system consists of the park brake switches, seat switch, and deck clutch switch.

IMPORTANT: Repair this important safety feature immediately if it malfunctions.

This safety feature prevents mower runaway or accidental entanglement during operation.

Check the mower's safety start interlock system daily, prior to operation.

To inspect the system:

1. Sit on the seat when testing the seat switch.
2. Set both steering control levers in the park brake position.
3. Start the engine and allow it to warm up to operating temperature.
4. With the deck clutch switch down and the steering control levers in the park brake position, slowly rise off of the seat. **The engine should continue to run.**
5. With the deck clutch switch up and/or the steering control levers in the neutral position, slowly rise off of the seat. **The engine should stop.**
6. **If the engine fails to stop when:**
   - the deck clutch switch is up, or
   - one or both of the steering control levers is in the up (out of neutral position), and
   - the operator is off the seat, then
   - check the function of the seat switch. Replace the seat switch if it is not operating properly **(is not opening or closing)** and if the cause can not be determined.

   If you cannot locate the problem contact your Hustler® Dealer.

WARNING

The safety interlock system should always function per steps 4 and 5. If it does not function properly, correct it immediately. Do not operate machine without a properly functioning seat safety switch.

Engine Starting

The mower's safety start interlock system is also designed to protect the operator and others from accidental injury due to unintentional engine starting. The engine starting motor will not engage until:

1. Steering control levers are in the park brake position.
2. Deck clutch switch is in the down (OFF) position.

WARNING

The safety interlock system must not be disconnected or bypassed. Doing so could cause the machine to operate unexpectedly resulting in personal injury.

NOTE: The operator's seat is equipped with a separate safety switch. If for any reason the operator should become unseated when the steering control levers are not in the park brake position (park brake switches are disengaged) or the deck clutch switch is engaged, the engine will stop.

The following steps are the correct procedures for starting the engine. If difficulty is encountered, contact the Hustler® Dealer in your area.

1. Before starting mower each day, perform daily pre-operation checking. (See *Safety Start Interlock System* section.)
2. Make sure the steering control levers are in the park brake position and deck clutch switch is disengaged. Only start the engine from the operator's position.
3. Use the choke, if the unit is equipped with one, when engine is cold, or if warm engine fails to start within 5 seconds of cranking. Avoid flooding and operate engine without choking as soon as possible.
4. Set throttle at approximately 1/2 open position.
5. Insert key in ignition switch and rotate full clockwise to engage starting motor. Release key when engine starts.

   IMPORTANT: The engine starter should not be operated for periods longer than 30 seconds at a time. An interval of at least two minutes should be allowed between such cranking periods to protect the starter from overheating and burn-out.
6. Perform test to make sure safety start interlock system is operating properly. Refer to *Safety Start Interlock System* section.

7. Allow the engine to idle a few minutes before advancing the throttle and/or engaging the deck clutch.

Stopping the Engine

Use the following procedure to shut the engine off.

1. Place the steering control levers in the park brake position.
2. Throttle the engine back to low idle, then disengage the deck clutch. Refer to the *Mower Deck Operation* section for more details.
3. Let the engine run at low idle for two minutes.
4. Rotate the ignition key counter-clockwise to the "OFF" position. Remove the key from the switch before leaving the mower.

Moving the Mower With Stalled Engine

The bypass valves on the transaxles allow the mower to be moved if the engine quits working.

WARNING

Allow the engine exhaust manifold to cool before engaging or disengaging the bypass valves. The bypass valve rods are located close to the exhaust system.

Before moving the unit, pull out on the bypass valve rod (Figure 3-5) until the notch in the rod hooks over the edge of the slot. This places the bypass valves in the disengaged position.

Place the steering control levers in the neutral position, to release the park brakes, so that the mower can be moved.

Do not tow the machine. Move it by hand or use a winch to load onto a trailer for transporting.

Secure the mower, facing forward, when transporting on another vehicle. Tie the mower down securely using straps, chains, cables, or ropes. Both front and rear straps should be directed down and outward from the machine.

IMPORTANT: Always make certain the two bypass valves are returned to their operating position before running the mower following repairs.

Mower Operation

This mower features the SmoothTrak™ steering system. The following provides you with detailed information on how to operate the mower efficiently.

Bypass valve rod shown in operating position

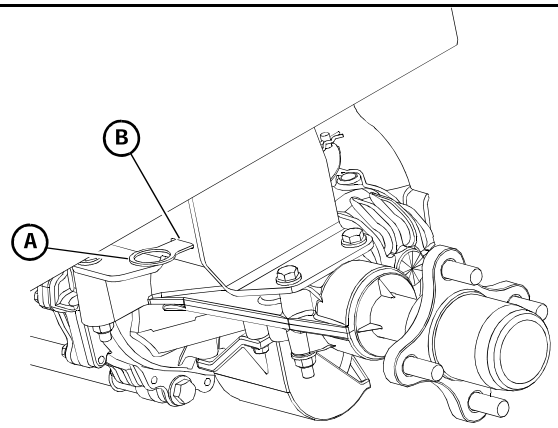

A. Bypass valve rod	**B.** Slot

Figure 3-5

EN

Driving the Mower

DANGER

Never make sudden stops or reverse direction, especially when maneuvering on a slope. The steering is designed for sensitive response. Rapid movement of the control levers in either direction could result in a reaction of the mower that can cause serious injury.

After starting the engine, engage the steering control levers and steer as follows:

To go forward, push the steering control levers forward an equal distance. Figure 3-6

To go in reverse, pull the steering control levers rearward an equal distance. Figure 3-6

To turn left, move the right steering control lever farther forward from neutral than the left steering control lever.

To turn right, move the left steering control lever farther forward from neutral than the right steering control lever. Figure 3-6

Zero radius turn, move one steering control lever forward and the other steering control lever back of neutral. This allows the drive wheels to counter-rotate. Figure 3-6

To stop or decrease speed, move steering control levers to neutral. When going forward pull back gently on steering control levers. When going in reverse push forward gently on steering control levers.

For emergency stops, when traveling forward or rearward, place the steering control levers in the park brake position immediately.

DANGER

When moving in the rearward direction push forward gently on steering control levers and avoid sudden movement. Any sudden movement could cause the front of the mower to come off of the ground resulting in possible loss of control, causing serious injury or death.

To make a three point turn to the right:

1. Move the left steering control lever farther forward from neutral than the right steering control lever and start the turn. Figure 3-7
2. Next, pull back on the steering control levers until they pass neutral and the machine starts to go rearward. Figure 3-7
3. Pull the right steering control lever farther rearward from neutral than the left steering control lever until the rear of the machine pivots around. Figure 3-7
4. Then, push the steering control levers forward until they both pass neutral and the machine starts to go forward. Figure 3-7
5. Push the left steering control lever farther forward from neutral than the right steering control lever and finish the turn. Figure 3-7

WARNING

Always be aware of what is behind the machine before backing up. Do not mow in reverse unless absolutely necessary. Always look down and behind before and while backing up.

IMPORTANT: Damage to the hydraulic system components may occur with rapid movement of the steering controls.

To increase speed, increase the steering control lever's distance from neutral. The farther forward the steering control levers are from neutral, the faster the mower will travel forward. The farther back the steering control levers are from neutral, the faster the mower will go in reverse.

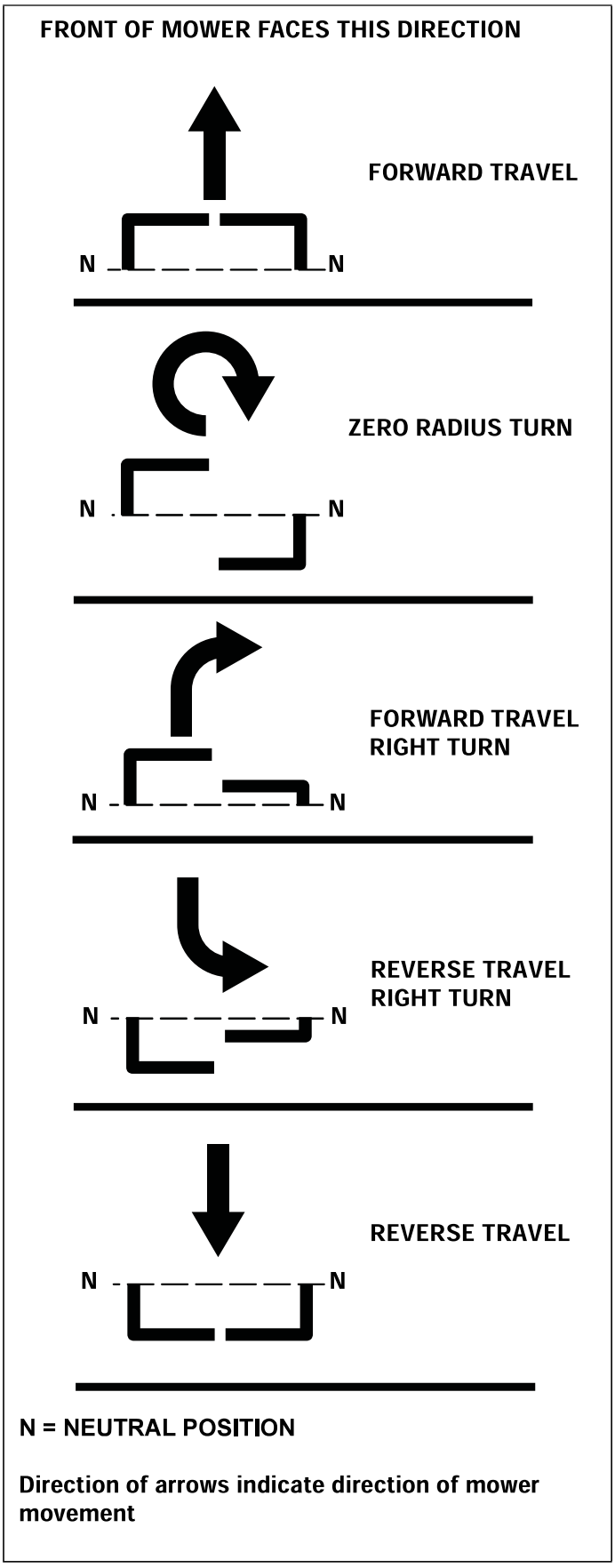

Figure 3-6

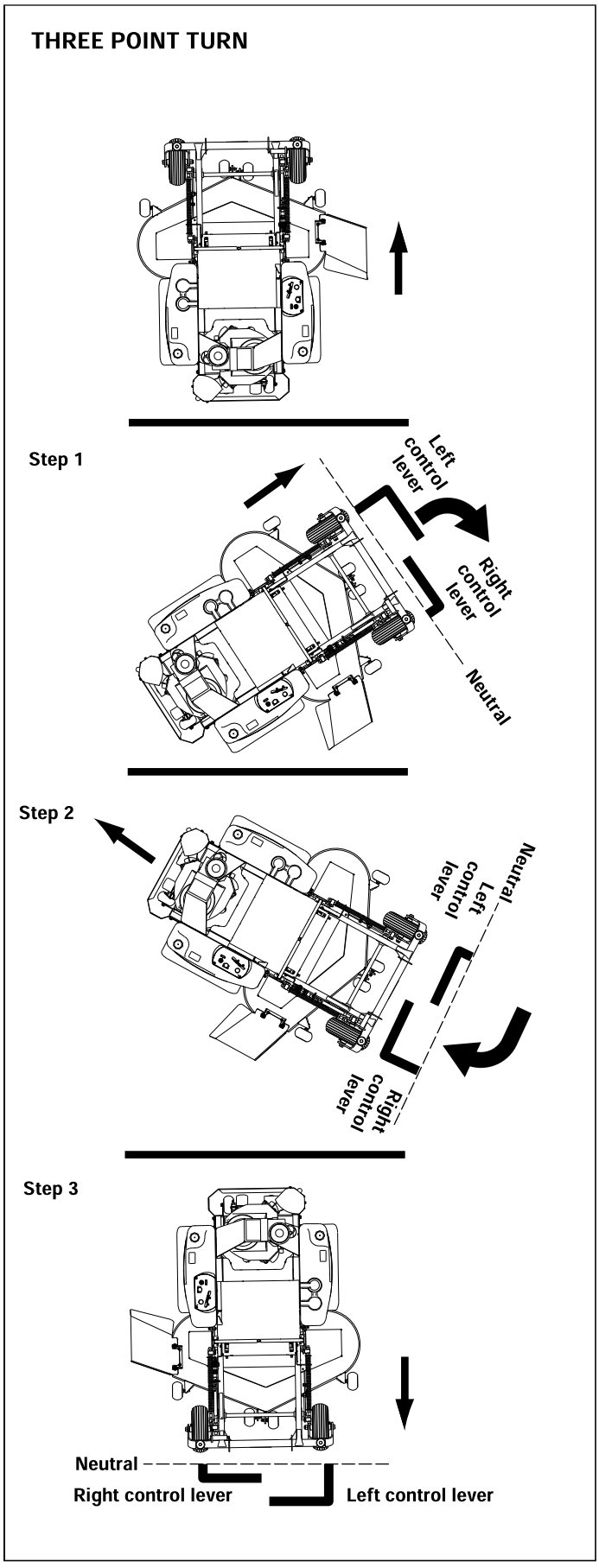

Figure 3-7

Operating Suggestions

DANGER

An inexperienced operator should not mow on slopes or on uneven terrain.

Before attempting normal speed operation an inexperienced operator should:

- be thoroughly familiar with the proper use and operation of the equipment.
- read the manual completely and thoroughly.
- have attempted slow moving maneuvers.

WARNING

If you lose steering control while operating the machine, place the steering control levers in the park brake position immediately. Inspect the machine and involve your Hustler® Dealer to resolve the problem before continuing to operate.

WARNING

The unit's steering control levers are very responsive: Easy does it! For smooth operation, move the levers slowly, avoiding sudden movement. Skill and ease of operation come with practice and experience. The machine can spin very rapidly. Use caution when making turns and slow down before making sharp turns.

Inexperienced operators may have a tendency to oversteer and lose control. Practice slow maneuvers at low engine rpm (idle) on a flat open area before attempting normal speed operation.

WARNING

Sharp depressions or raised obstacles (such as gutters or curbs) should not be directly approached at high speed in an attempt to "jump" them as the operator could be thrown from the equipment. Approach at a slow speed and angle one drive wheel at the obstruction. Continue at an angle until the wheel clears and then pivot the opposite wheel around.

When turning on soft wet turf, keep both wheels rolling either forward or backward. Pivoting on one stopped wheel can damage turf, especially when mowing.

Set the throttle at full rpm for maximum performance. This gives maximum power to the drive wheels and deck when needed. The throttle setting directly controls blade speed. Use the control levers to control ground speed rather than engine rpm.

Keep blades sharp. Many problems with incorrect cutting patterns are **due to dull blades** or blades which have been **sharpened incorrectly.** Information on sharpening blades is listed in this manual's maintenance section. **Blade sharpness should be checked daily.**

EN

DANGER

Never work with blades while the engine is running or deck clutch switch is engaged (on).

Always place the deck clutch switch in the disengaged position, place steering control levers in the park brake position, turn the engine off and disconnect the negative battery cable.

Block the mower up when you must work under it.

Wear gloves when handling blades.

Always check for blade damage if the mower strikes a rock, branch or other foreign object during mowing!

Direct grass discharge to the right, away from the unmowed area. Generally, this means using a pattern of **left turns.** Avoid throwing grass discharge onto unmowed area. Mowing clippings puts an unnecessary load on the unit and reduces mowing efficiency.

EN

When mowing a lawn for the first time cut grass slightly longer than normal to avoid scalping uneven terrain. When cutting grass taller than six inches, you may want to mow the lawn twice to achieve a better quality of cut.

During normal mowing cut only about 1/3 of the grass blade.

Alternate the mowing direction to keep the grass growing straight and for better dispersion of the clippings.

Remember, grass grows at different rates at different times of the year. Mow more often in the early spring to maintain the same cutting height. As the growth rate slows in midsummer, mow less frequently. If you cannot mow at a regular interval, mow at a high cutting height; then mow again two days later at a lower cutting height.

Raise the cutting height of the mower if the cutting width of the mower is wider than the previous mower. This ensures that uneven turf is not cut too short.

Raise the cutting height of the mower if the grass is slightly taller than normal or if it contains a high degree of moisture. Then mow it again with the cutting height set lower.

If the machine's forward motion must be stopped while mowing, a clump of grass clippings may drop onto your lawn. To avoid this, move onto a previously cut area with the blades engaged.

WARNING

Never direct the discharge of material from the mower deck toward bystanders.

- Never operate the mower deck with the discharge chute damaged, altered, removed, or in the raised position, except when the entire grass catcher attachment or mulching system is being used. Figure 3-8

DANGER

Never attempt to make any adjustments to the mower deck while the engine is running or with the deck drive clutch engaged. Mower blades cannot be seen and are located very close to the deck housing. Fingers and toes can be cut off instantly.

Discharge chute may vary from this illustration

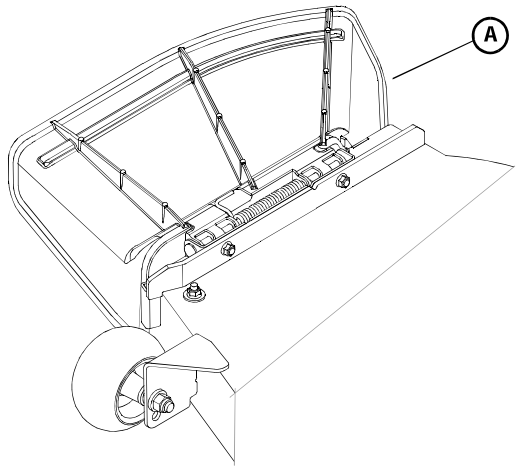

A. Discharge chute

Figure 3-8

Flex Forks

New Flex Forks® require a brief break-in period. Refer to the *Maintenance and Adjustments* section of this manual for more details.

Deck Clutch Operation

Before beginning operation, check to make sure the deck clutch switch is engaging and disengaging the blades properly.

WARNING

Make sure that the area around and under the deck is clear and that there are no bystanders in the immediate area before proceeding.

To check the deck clutch switch:

1. Start the engine and engage the deck clutch.
2. With the deck clutch switch up (clutch engaged) and the engine running, listen to confirm that the mower blades are rotating.
3. Now, push the deck clutch switch down (clutch disengaged), and with the engine running, listen to confirm that the blades have stopped rotating.

4. If the mower blades continue to rotate with the deck clutch switch down, discontinue operation immediately and contact your Hustler® Dealer.

Follow these procedures to maximize clutch life.

1. **Engage the clutch** only under the following conditions:
   - throttle set at approximately 2/3 as shown on instrument panel;
   - deck cutting height set to 6.35 cm or higher;
   - **no load** on the blades.

   After clutch engagement, adjust the deck cutting height to the desired level, if necessary, and advance the engine throttle to full rpm.

   IMPORTANT: Engaging the deck clutch at high engine rpm, low deck heights or when under heavy load (in tall grass, for example) can cause belts and/or electric clutch to slip, resulting in premature wear or possible damage.
2. **Disengage the clutch** only when the throttle is set at **less than 1/2 throttle.**

   Never disengage the clutch with the engine running at high rpm. Setting the throttle to less than 1/2 throttle when disengaging the clutch will help extend clutch life.

Warranty will not be allowed for deck clutches that fail due to improper engagement and disengagement practices.

Deck Cutting Height Adjustment

Deck cutting height is adjustable in 6.4 mm increments.

Step on the deck lift pedal and latch the transport lever in the deck transport position. Pull the adjusting pin out of the hole that it is in and insert it into the desired cutting height hole. Step on the deck lift pedal to release the transport lever. Figure 3-9

Step on the deck lift pedal and raise the deck to its highest position and latch the transport lever in place when transporting the unit. Figure 3-9

Anti-Scalp Wheels

Anti-scalp wheels are standard on these mowers. These wheels are designed to minimize scalping when mowing on rough uneven terrain. Figure 3-10

Raptor XDX

Anti-scalp wheels can be installed in two positions. With the wheel installed in the **bottom hole,** the wheel is located 40.6 mm below the mower blades. This setting is preferred when mowing at cutting heights of 63.5 mm or higher.

When the wheel is mounted in the **top hole,** it is located 17.8 mm below the mower blades. This is the acceptable setting for mowing at cutting heights of 38.1 mm or higher.

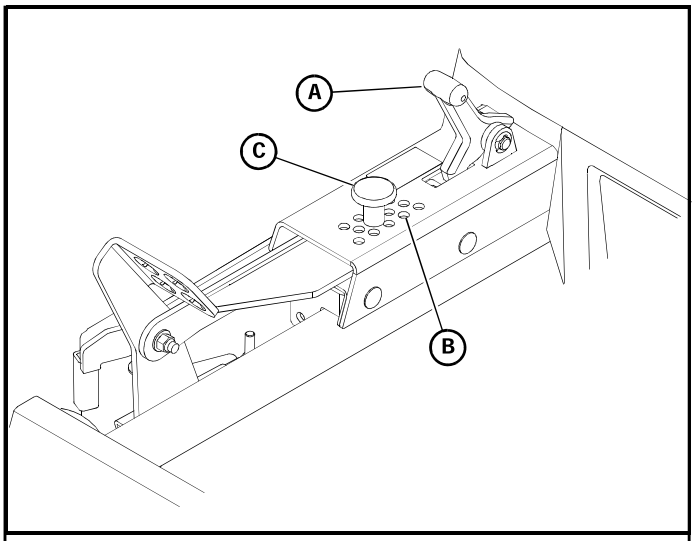

A. Transport lever **B.** Cutting height holes	**C.** Pin

Figure 3-9

Raptor XD

Anti-scalp wheels can be installed in two positions. With the wheel installed in the **bottom hole,** the wheel is located 42.7 mm below the mower blades. This setting is preferred when mowing at cutting heights of 63.5 mm or higher.

When the wheel is mounted in the **top hole,** it is located 19.8 mm below the mower blades. This is the acceptable setting for mowing at cutting heights of 38.1mm or higher.

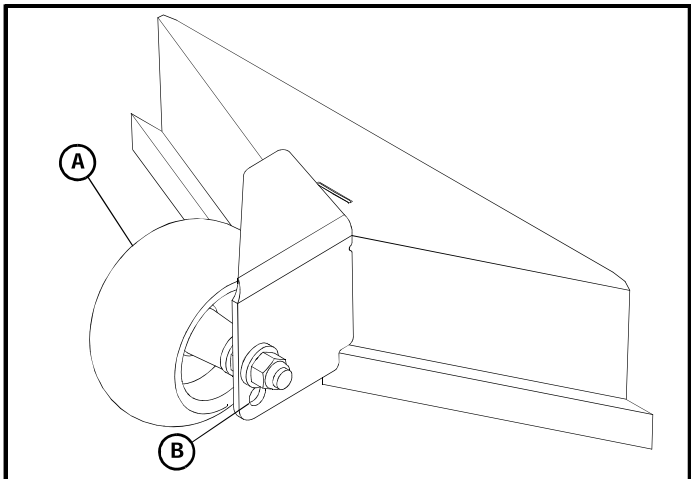

A. Anti-scalp wheel	**B.** Adjusting holes

Figure 3-10

EN

EN

MAINTENANCE & ADJUSTMENTS

Safe Servicing Practices

Refer to the *Safety Precautions* section of this manual for more service safety information.

Service Introduction

Regular maintenance is the best prevention for costly downtime or expensive, premature repair. The following pages contain suggested maintenance information and schedules which the operator should follow on a routine basis. For more detailed information order the correct *Parts Manual* and *General Service Manual* for your unit. Refer to the *Product Literature* section of this manual.

Remain alert for unusual noises, which could signal a problem. Visually inspect the machine for any abnormal wear or damage. A good time to detect potential problems is while performing scheduled maintenance service. Correcting the problem as quickly as possible is the best insurance.

Clear away heavy build-up of grease, oil and dirt, especially in the engine and under the seat platform areas; minute dust particle are abrasive to close-tolerance engine and hydraulic assemblies.

Inspect mower daily for grass clippings and wire or string tangles. The underside of the mower deck will collect a build-up of grass clippings and dirt, especially when grass is wet or has high moisture content. This build-up will harden, restricting blade and air movement and will probably show a poorer quality of cutting. Therefore it should be removed routinely.

To do this it will be necessary to raise and block the deck using jack stands or blocks in the full up position. Scrape the build-up from underneath.

IMPORTANT: Seat arm rests — Place the steering control levers in the park brake position and pivot the arm rests upward before lifting the seat platform to prevent arm rest damage.

Some repairs require the assistance of a trained service mechanic and should not be attempted by unskilled personnel. Consult your Hustler® service center when assistance is needed.

Torque Values

WARNING

Particular attention must be given to tightening the drive wheel lug nuts and blade spindle bolts. Failure to correctly torque these items may result in the loss of a wheel or blade, which can cause serious damage or personal injury.

Torque values are given below:

	N•m
Wheel (lug) nuts	95
Blade spindle bolt top	99
Blade spindle bolt bottom	160

Lug nuts only - It is recommended that these be checked after the first 2 hours of operation, initially, every 40 hours and following removal for repair or replacement.

For all other torques refer to the mower's *General Service Manual* for standard torque chart. See the *Product Literature* section for ordering information.

For engine torque values, refer to the engine owner's manual.

Tires

It is important for level mowing that the tires have the same amount of air pressure. The recommended pressures are:

Drive wheels	55—83 KPa
Front wheels	55—83 KPa

Only pneumatic tires are approved for use on this mower. Warranty claims will be denied on any mower equipped with non-pneumatic tires.

Flex Forks Break-In

Flex Forks® may raise the front of the mower approximately 25.4 mm when first installed. It is not necessary to re-level the deck at this time. Drive the mower for approximately 20 minutes, stop the mower and check to see if the deck is level. If adjustment is required, refer to the mower's General Service Manual for deck leveling procedures.

DANGER

Never attempt to make any adjustments to the mower deck while the engine is running or with the deck drive clutch engaged. Mower blades cannot be seen and are located very close to the deck housing. Fingers and toes can be cut off instantly.

Lubrication

Use SAE multi-purpose grease.

Electrical System

IMPORTANT: Refer to the *Safety* section of this manual for detailed battery servicing safety information.

The electrical system is a 12 volt, negative ground. The recommended battery size is:

EN

Garden tractor BCI group U1R with a 225 or better cranking AMP rating.

A maintenance-free battery is recommended. Otherwise, follow battery manufacturer's maintenance, safety, storing and charging specifications.

Master In-Line Fuse

These mowers have a master in-line fuse in the electrical system. This is the main fuse to protect the complete electrical system. It is located under the seat platform and next to the solenoid. Figure 4-1



A. Master fuse housing

Figure 4-1

Hydraulic System

This mower is equipped with two integrated hydrostatic transmissions. Figure 4-2

IMPORTANT: Never use hydraulic or automatic transmission fluid in this system; use only motor oil as specified.

Use **SAE 20W50 motor oil, 15W50 synthetic oil or 20W50 synthetic oil** when changing the system oil and filter. **Hustler® Full Synthetic 20W50 Hydrostatic Transmission Oil is recommended.**

Check oil after every 40 hours of operation or weekly, whichever occurs first. Check more often if system appears to be leaking or otherwise malfunctioning.

Check oil level in the transaxles by removing the plug in the top of the transaxle. The oil must be to the top of the transaxle housing.

Initial system oil and filter change **must** be performed between 25 and 50 hours of use or within the first year of service, whichever comes first. Thereafter, replace filter and oil in each transaxle **every 2 years or 200 hours, whichever comes first.**

It is recommended that hydraulic system service be performed by your Authorized Hustler® Dealer because of the complexity of the process and potential for transaxle damage. Retain service records to validate warranty.

NOTE: The filter guard must be removed to access filter.

Each transmission's filter is located per Figure 4-2. A standard oil filter wrench is used to change filter, threads are right handed.

Use a Hustler® approved filter element only.

IMPORTANT: Dirt is the primary enemy of any hydraulic system.

IMPORTANT: When washing the mower, direct the spray away (especially if using a power washer) from the transmission's seals to prevent water intrusion and to ensure component performance.

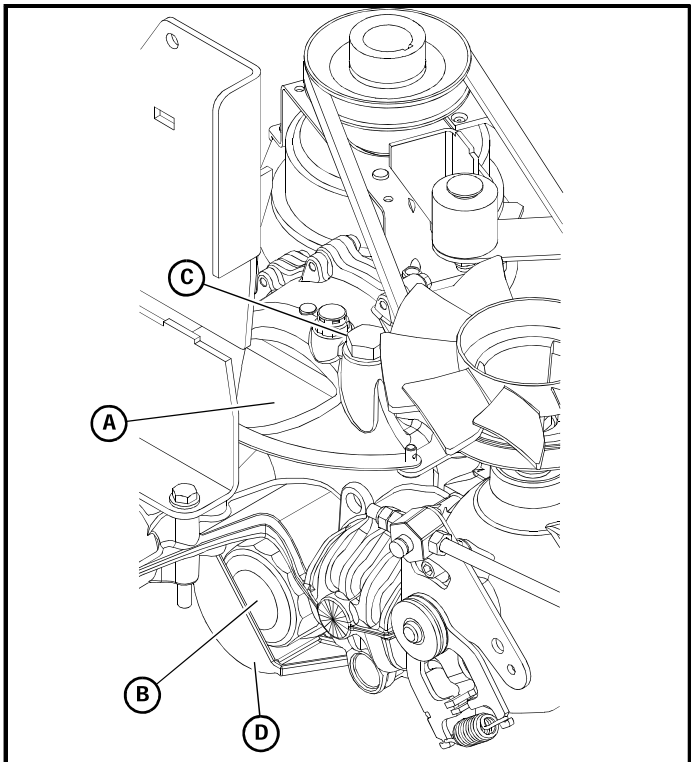

A. Transmission
B. Filter
C. Plug
D. Filter guard

Figure 4-2

Fuel and Evaporative Emissions Control System

IMPORTANT: Refer to the *Safety* section of this manual for fuel handling safety information.

IMPORTANT: Refer to the engine owner's manual for additional emissions control information.

Use only Hustler® approved replacement parts.

Your evaporative emission control system may include parts such as:

- fuel tanks
- fuel lines
- fuel line fittings
- fuel caps
- carbon canisters
- canister mounting brackets

- carburetor purge port connection
- filters
- vapor hoses
- clamps, control valves
- control solenoids
- electronic controls
- vacuum control diaphragms
- purge valves
- liquid/vapor separator
- other associated components

WARNING

Use of replacement parts not equivalent to the original parts may result in system failure and pose a safety hazard.

The fuel tank is located under the seat platform with the filler neck and fuel cap located in the left side fender. Figure 4-3

Park the mower on level ground before filling fuel tank.

Clean the area around the fuel cap before removing the cap. Remove the fuel cap slowly.

When threading the fuel cap onto the filler neck, tighten the cap until it begins to click, then, continue to turn it until at least three clicks are heard.

IMPORTANT: Do not overfill the fuel tank. The fuel tank should be filled **no higher than the bottom of the fill neck.** The fuel system is designed to leave room for the fuel to expand with fuel temperature changes. Figure 4-4

WARNING

Overfilling the fuel tank may cause the following:

- Engine damage
- Fire hazard!

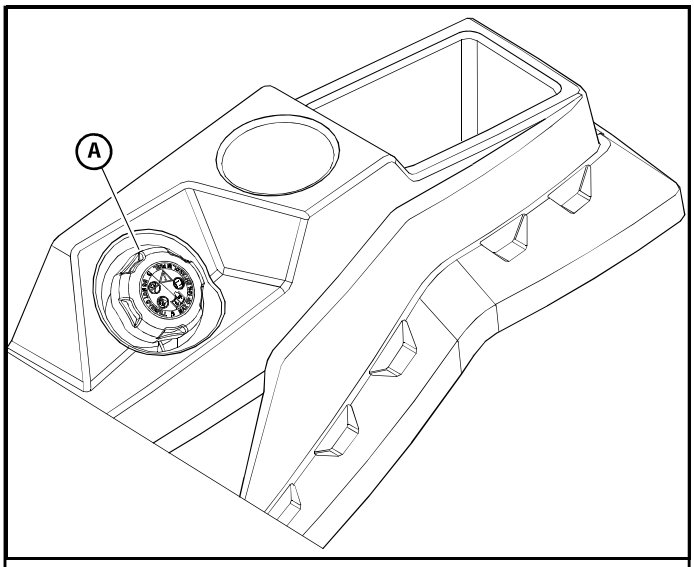

A. Fuel cap

Figure 4-3

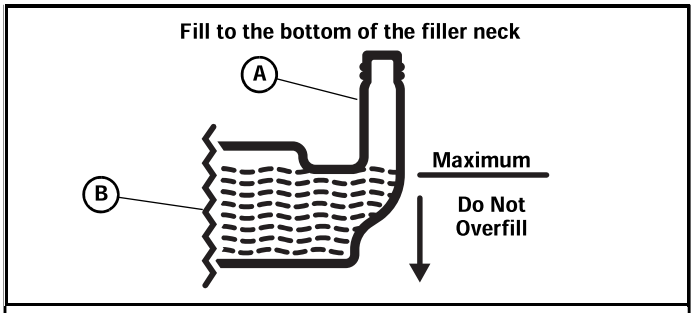

A. Filler neck | **B.** Fuel tank

Figure 4-4

Use regular unleaded gasoline with an octane rating of 87 or higher. Maximum of 10% ethanol (E10) in fuel. Fuels with greater than 10% ethanol (such as E15, E20 and E85) voids warranty. Fuels with greater than 10% ethanol are not approved for use and such illegal use could cause equipment failure and pose a fire hazard.

Refer to the *Engine Owner's Manual* for additional fuel specification requirements.

EN

Fuel Evaporation System Filter

These mowers have a fuel evaporation system filter. This filter must be checked and replaced every 100 hours or annually whichever comes first. Figure 4-5

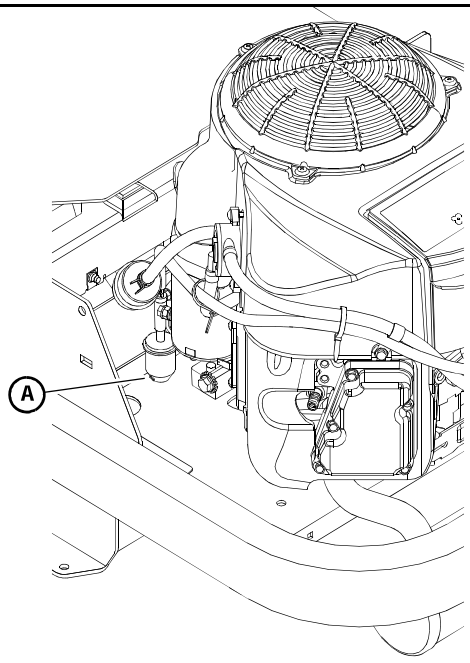

A. Fuel evaporation system filter

Figure 4-5

Engine Oil and Filter

WARNING

If the engine has been running and is up to operating temperature, allow the engine to cool before changing the oil. Engine and engine oil will be very hot, so be very careful when changing oil and wear the appropriate protective gear to avoid being burned or exposed to engine oil.

Check engine oil daily and after every 4 hours of operation. Mower must be on a level surface when checking oil. Refer to engine manual and maintenance schedule for oil capacities. Hustler® Motor Oil is recommended.

Initial oil and filter service should be performed between 5 and 10 hours. Thereafter every 40 – 60 hours or annually, whichever comes first. Condition of oil should be checked often and more frequent service for units used in adverse conditions may be required. Always use the engine manufacturer recommended viscosity and API classification of oil. Oils specially formulated for air cooled engines that include zinc are recommended. Retain service records to validate warranty.

IMPORTANT: After the new oil filter has been installed, clean up any oil which may have spilled onto the engine plate, muffler, and exhaust system.

Draining the engine oil:

1. Locate the oil drain valve on the lower right side of the engine.
2. Locate the oil drain hose that was supplied with the machine. Be sure to clean and clear it of debris that might block the flow of the engine oil. Figure 4-6
3. Attach one end of the hose onto the oil drain valve nipple. Make sure the hose is pushed all the way onto the valve. Figure 4-6
4. Position the loose end of the hose forward and down in front of the right side transmission so that it can drain into a suitable oil drain container.
5. With the hose in position, use a 10 mm wrench or socket and open the valve approximately 4 turns in the counterclockwise direction. Allow 10 minutes for engine oil to adequately drain.
6. After oil is drained, close the valve by turning it in the clockwise direction until it is fully closed.
7. Once the valve is closed, carefully remove the oil drain hose and clean up any spilled oil.

   IMPORTANT: All oil drips or spills **must** be cleaned off of the engine plate, muffler, and exhaust system before operating the machine.
8. Clean the oil drain hose and store it appropriately. Figure 4-6

Kawasaki engines

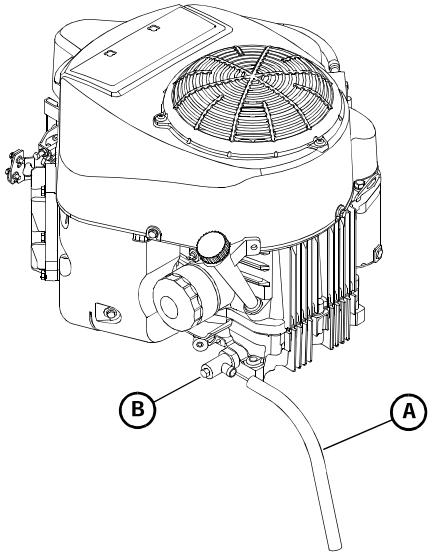

A. Oil drain hose	**B.** Oil drain valve

Figure 4-6

Engine Air Filter

Perform engine air filter maintenance per the *Maintenance Schedule* shown elsewhere in this manual.

General Engine Maintenance

Detailed instructions and recommendations for break-in and regular maintenance are specified in the *Engine Owner's Manual*. Please refer to this manual for engine servicing, lubricating oil levels with quality and viscosity recommendations, bolt torques, etc. The engine warranty is backed by the engine manufacturer. Special attention should be paid to applicable data which will not be duplicated here.

Belts

Inspect belts frequently for wear and serviceability. Replace a belt that shows signs of:

- severe cuts
- tears
- separation
- weather checking
- cracking
- burns caused by slipping.

Slight raveling of belt covering does not indicate failure, trim ravelings with a sharp knife.

WARNING

If the pump belt fails, loss of control will occur especially when operating on a slope. **If you lose steering control while operating the machine, place the steering control levers in the park brake position immediately. Inspect the machine and involve your Hustler® Dealer to resolve the problem before continuing to operate.**

Inspect the belt pulley grooves and flanges for wear. A new belt, or one in good condition, should never run against the bottom of the groove. Replace the pulley when this is the case, otherwise the belt will lose power and slip excessively.

Never pry a belt to get it on a pulley as this will cut or damage the fibers of the belt covering.

Keep oil and grease away from belts, and never use belt dressings. Any of these will destroy the belt composition in a very short time.

Mower Blades

Mower Blade Maintenance

IMPORTANT: Refer to the *Safety* section of this manual for blade handling safety information.

Refer to the *Mower Blade Replacement* section for blade removal and installation.

WARNING

Mower blades are sharp and can cut. Wrap the blade(s) or wear gloves and use extra caution when servicing them.

Check the mower blades daily, they are the key to power efficiency and well groomed turf. Keep the blades sharp. A dull blade will tear rather than cut the grass, leaving a brown ragged top on the grass within a few hours. A dull blade also requires more power from the engine.

Replace any blade which is bent, cracked or broken.

WARNING

Always check for blade damage:

- if mower strikes a rock, branch or other foreign object during mowing!
- or if an abnormal vibration occurs while operating.

Make all necessary repairs before resuming operation.

Sharpen the blades following the pattern shown. Touch-up sharpening can be done with a file. Figure 4-7

After grinding the blades, check for balance. Blade balancing can be done by placing the blade on an inverted line punch or 5/8" bolt. A commercial balancing tool is also available through most hardware supply stores.

The blade should not lean or tilt. When spinning the blade slowly it should not wobble. Balance the blade before reinstalling.

Lay the blade on a flat surface and check for distortion. Replace any distorted blade. Figure 4-8 & Figure 4-9

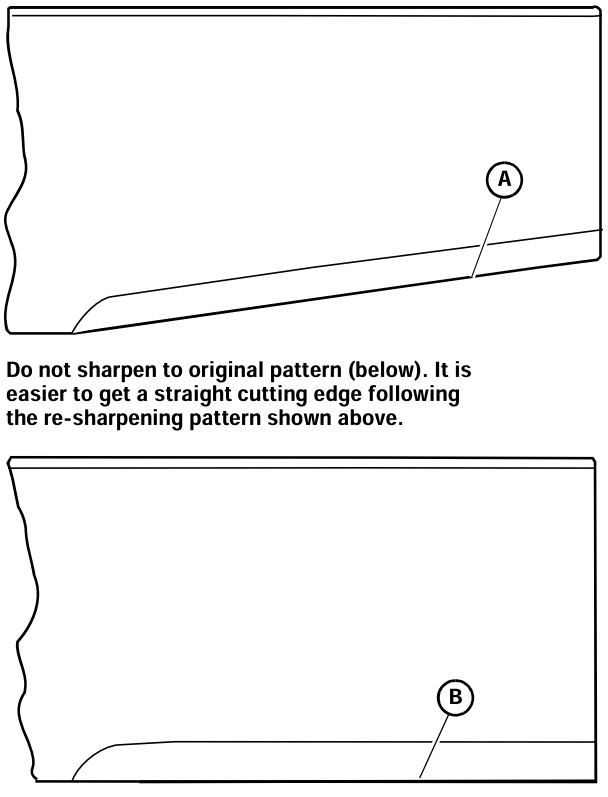

A. Re-sharpening pattern
B. Original edge

Figure 4-7

EN

Comparison of Warped and Straight Blades

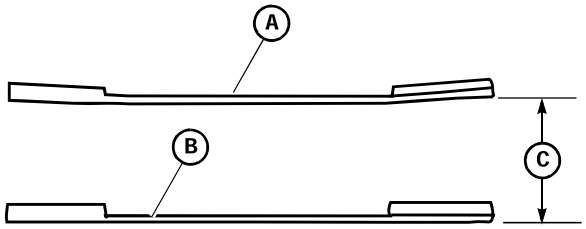

A. Warped blade — replace
B. Straight blade
C. Cutting plane

Figure 4-8

EN

End view of blades, comparing twisted and straightened blades.

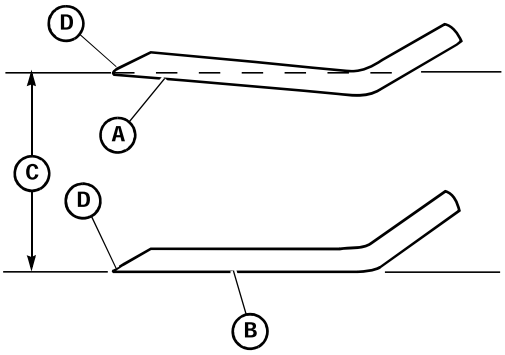

A. Twisted blade edge — replace blade
B. Straight blade edge
C. Cutting plane
D. Cutting edge

Figure 4-9

Mower Blade Replacement

IMPORTANT: Refer to the *Safety* section of this manual for blade handling safety information.

WARNING

Mower blades are sharp and can cut. Wrap the blade(s) or wear gloves and use extra caution when servicing them.

A 5/8" wrench is required to remove the 7/16" cap screw holding the blade to the spindle shaft. **NOTE:** A blade holding tool (part number 381442) is available from Hustler® Turf Equipment. It is designed to prevent the blades from rotating when they are being removed or installed on the spindle. Contact your Hustler® Dealer for more information.

Do not re-use spindle bolts which have stripped, worn or undercut threads. Torque bolts on spindles to 65 N•m when reinstalling blades.

WARNING

Failure to correctly torque the bolt may result in the loss of the blade which can cause serious injury.

IMPORTANT: The blade sail (curved part) must be pointing upward toward the inside of the deck to ensure proper cutting.

IMPORTANT: The spindles have 5/8" diameter boss that centers the blades on the spindles. When re-installing blades, make sure the blade is centered on the boss and seated flat against the spindle shaft face.

WARNING

Rotate the blades after installation to ensure blade tips do not touch each other or sides of the mower.

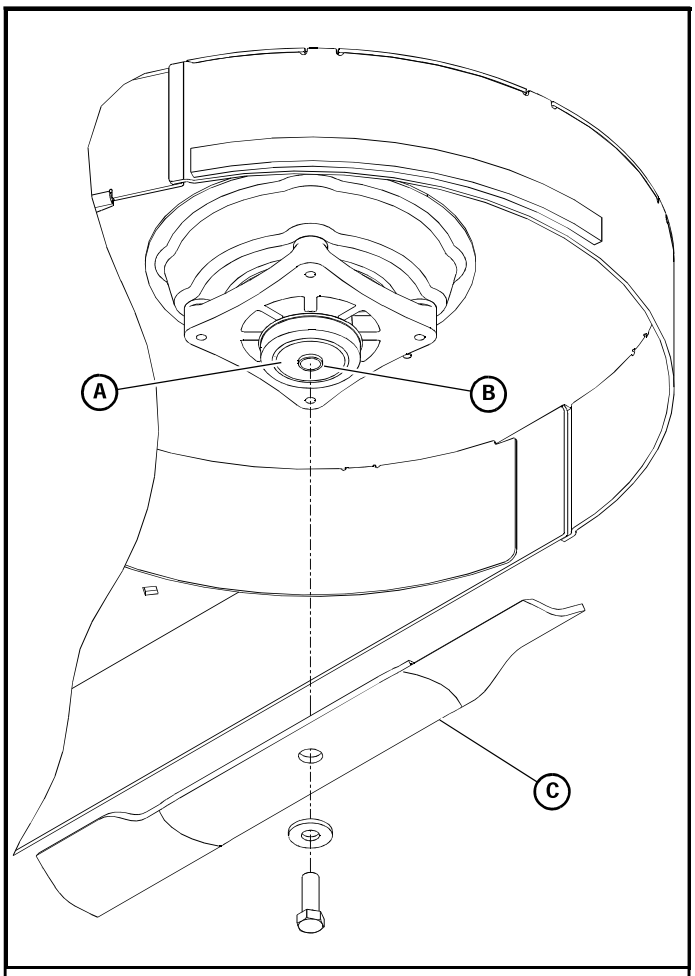

A. Spindle shaft face **B.** Boss	**C.** Blade

Figure 4-10

Mower Blade Options

The following is a list of the approved mower blade options that are available from Hustler® Turf Equipment for this mower.

DANGER

Use only genuine Hustler® replacement blades to ensure that original standards are maintained. Failure to use approved blades could lead to blade breakage which could result in death, injury or property damage.

48" Side Discharge Deck Raptor® XD	
607558	BLADE, 16.50"-L-F-CW-LT
601014	BLADE, 16.50"-L-F-CW
795757	BLADE, 16.50"-H-F-CW
796623	BLADE, 16.50"-MUL-F-CW
796631	BLADE,16.50"-GAT-F-CW
796649	BLADE, 16.50"-CAT-F-CW
42" Side Discharge Deck Raptor® XD	
607564	BLADE, 20.50"-L-F-CW-LT
600901	BLADE, 20.50"-L-F-CW
794685	BLADE, 20.50"-H-F-CW
794214	BLADE,20.50"-MUL-F-CW
794230	BLADE,20.50"-GAT-F-CW
793935	BLADE,20.50"-CAT-F-CW
48" Side Discharge Deck Raptor® XDX	
606252	BLADE, 16.50"-H-F-CW
601014	BLADE, 16.50"-L-F-CW
796623	BLADE, 16.50"-MUL-F-CW
796631	BLADE,16.50"-GAT-F-CW
54" Side Discharge Deck Raptor® XDX	
606251	BLADE, 18.50"-H-F-CW
601012	BLADE, 18.50"-L-F-CW
601012	BLADE, 18.50"-MUL-F-CW
797712	BLADE, 18.50"-GAT-F-CW
60" Side Discharge Deck Raptor® XDX	
606253	BLADE, 20.50"-H-F-CW
600901	BLADE, 20.50"-L-F-CW
794214	BLADE, 20.50"-MUL-F-CW
794230	BLADE, 20.50"-GAT-F-CW

Seat Adjustment

IMPORTANT: Any maintenance operation that requires the removal of safety covers **must** be performed by a trained service technician.

The seat on these mowers can be adjusted forward and rearward by pivoting the seat platform up and forward. Then, loosen the four cap screws on the underneath side of the seat platform. Position the seat where you have the best control of the machine and are the most comfortable and then

EN

tighten the cap screws. Torque cap screws to 9.5 N•m. Figure 4-11

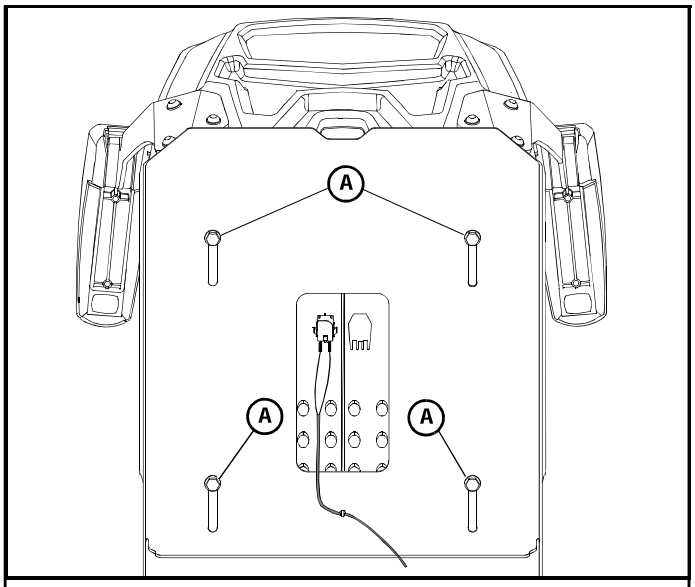

A. Cap screws

Figure 4-11

Steering Control Lever Adjustment

The steering control levers can be adjusted for operator comfort.

A. To pivot the upper control levers forward or rearward, loosen the cap screws that attach the upper control lever to the lower lever. Then, pivot the upper control lever. Tighten the cap screws. Figure 4-12

B. To lower and raise the control levers, remove the cap screws. Slide the upper control lever up or down and align the holes in it with the holes in the lower lever. Re-install the cap screws and tighten.

The steering control levers should be adjusted so that they align with each other when in the neutral position.

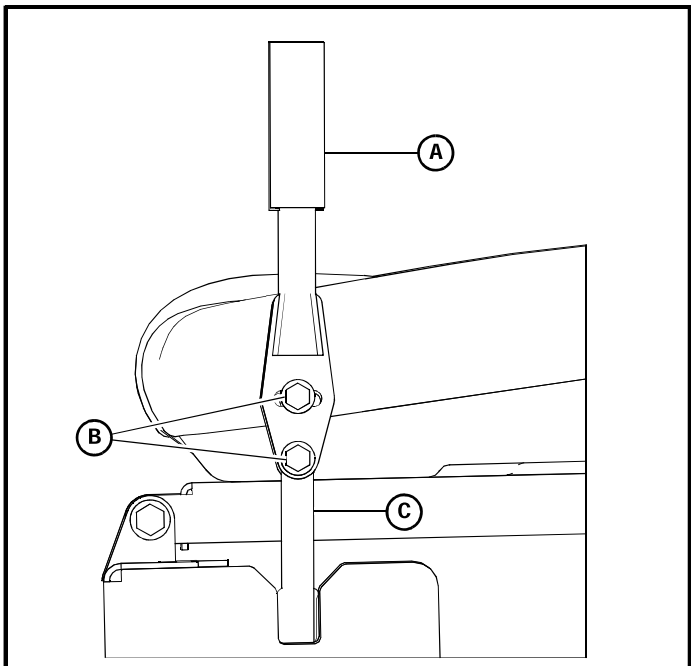

A. Upper control lever
B. Cap screws
C. Lower control lever

Figure 4-12

Maintenance Schedule
Refer to Figure 4-13, Figure 4-14, Figure 4-15, Figure 4-16, Figure 4-17, & Figure 4-18

SERVICE AT INTERVALS INDICATED	WEEKLY OR 40 HOURS	* ANNUALLY OR 100 HOURS
Verify safety start interlock system	Prior to each use	
Visually inspect unit for loose hardware and/or damaged parts	Prior to each use	
Visually inspect tires	Prior to each use	
Check oil level, engine (1)	Prior to each use or every 4 hours	
Clean air intake screen (8)	Prior to each use or every 4 hours	
Check fuel level	Prior to each use	
Blades - sharpen & securely fastened	Prior to each use	
Discharge chute - securely in place & in lowest position	Prior to each use	
Check tire pressure with a gauge	Prior to each use	
Clean engine and transmission compartment (10)	After each use	
Replace engine air cleaner element (4) (9)	As needed	
Change engine oil & filter (1) (3)	X	
Clean cylinder and head fins (9)	X	
Check battery connections (10)	X	
Clean engine exterior (9)	X	
Tighten lug nuts on wheels (2)	X	
Check transaxle oil level	X	
Clean & regap spark plugs (9)		X
Check transmission & deck belt tension and condition (5) (10)		X
Check fuel system (6)		X
Check fuel tank grommet (6)		X
Change fuel filter (6)		X
Replace fuel evaporation system filter (8)		X
Replace spark plugs (9)		X
Change transaxle oil and filter (7)		200 hours

EN

NOTES:

1. Initial engine oil change between 5 and 10 hours of operation. Thereafter, change oil after every 40 – 60 hours of operation or annually, whichever comes first. Change more often under dusty or dirty conditions and during hot weather periods. Hustler® Motor Oil is recommended.
2. Torque initially and after first 2 hours of operation.
3. Change engine oil filter per the engine manufacturer's recommendations. Refer to Engine Owner's Manual for recommendations and other maintenance items.
4. Service more often under dusty or dirty conditions. Use caution when servicing to prevent dust contamination in the engine. **Do not** clean filter element. Replace with a new one.
5. **Pump drive belt only - Inspect every month** and replace if worn or cracking is noticed. Otherwise, **replace every 2 years**.
6. Check fuel system for any cracks or leaks including, but not limited to, fuel line hoses, fuel valve, vent line hoses, vent valve, vapor valve, and grommets. Replace as needed.
7. Initial hydraulic system oil and filter change should be performed between **25 and 50 hours of use or within the first year of service, whichever comes first.** Thereafter, replace filter and oil in each transaxle every 2 years or 200 hours, whichever comes first. Hustler® Full Synthetic 20W50 Hydrostatic Transmission Oil is recommended.
8. More often under dusty or dirty conditions and during hot weather.
9. Refer to engine owner's manual for engine service information.
10. Any maintenance operation that requires the removal of safety covers **must** be performed by a trained service technician.

* After completing maintenance cycle (100 hours), repeat cycle.

Figure 4-13

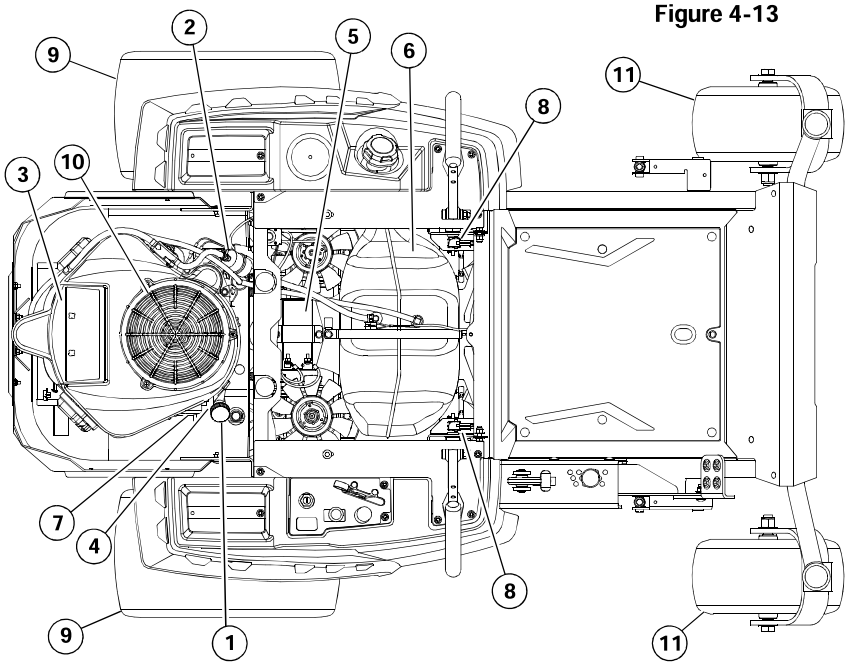

1. Engine Oil Fill & Dipstick
2. Fuel Filter
3. Engine Air Cleaner
4. Engine Oil Drain Valve
5. Battery
6. Fuel Tank
7. Engine Oil Filter
8. Park Brake Switch (2)
9. Drive Tire
10. Engine Air Intake Screen
11. Front Wheel Tires
12. Pump Belt
13. Deck Belt
14. Blades
15. Fuel Evaporation System Filter

Figure 4-14

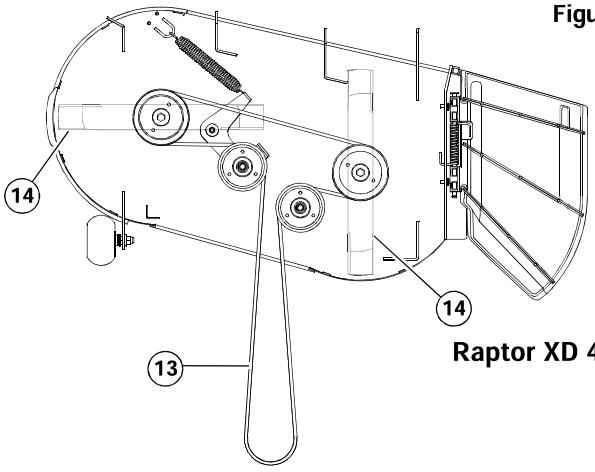

Raptor XD 42″ Deck

Figure 4-15

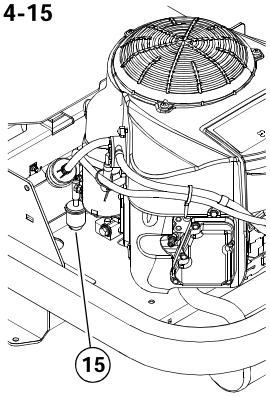

Figure 4-16

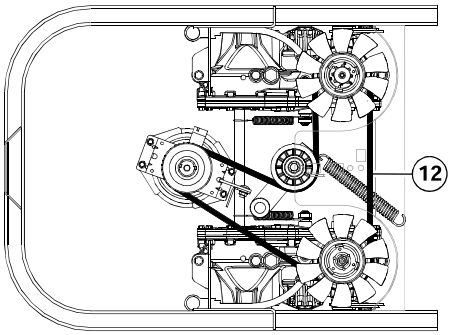

Figure 4-17

Raptor XD 48" Decks

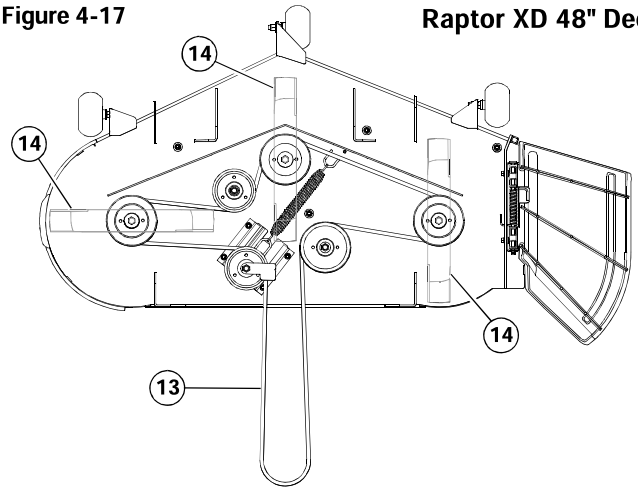

Figure 4-18

Raptor XDX 48"/54"/60" Decks

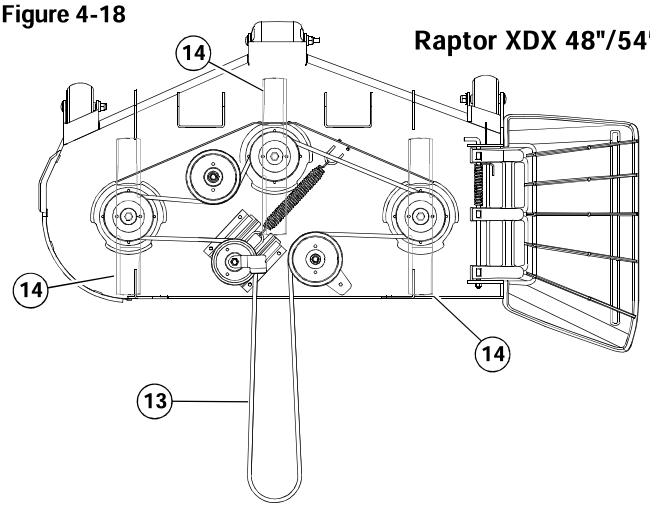

1. Engine Oil Fill & Dipstick
2. Fuel Filter
3. Engine Air Cleaner
4. Engine Oil Drain Valve
5. Battery
6. Fuel Tank
7. Engine Oil Filter
8. Park Brake Switch (2)
9. Drive Tire
10. Engine Air Intake Screen
11. Front Wheel Tires
12. Pump Belt
13. Deck Belt
14. Blades
15. Fuel Evaporation System Filter

EN

Maintenance Record

Date:	Maintenance/Service Performed:
Dealer:	
Hour Meter Reading:	
Date:	Maintenance/Service Performed:
Dealer:	
Hour Meter Reading:	
Date:	Maintenance/Service Performed:
Dealer:	
Hour Meter Reading:	
Date:	Maintenance/Service Performed:
Dealer:	
Hour Meter Reading:	
Date:	Maintenance/Service Performed:
Dealer:	
Hour Meter Reading:	

Date:	Maintenance/Service Performed:
Dealer:	
Hour Meter Reading:	
Date:	Maintenance/Service Performed:
Dealer:	
Hour Meter Reading:	
Date:	Maintenance/Service Performed:
Dealer:	
Hour Meter Reading:	
Date:	Maintenance/Service Performed:
Dealer:	
Hour Meter Reading:	
Date:	Maintenance/Service Performed:
Dealer:	
Hour Meter Reading:	

EN

TROUBLESHOOTING

The majority of operating problems that occur with a system can be traced to improper adjustments or delayed service. A consistently applied preventative maintenance program, as outlined in the *Maintenance* section of this manual, will prevent many problems. The following chart is designed to help you locate a problem by suggesting probable causes and the recommended solutions.

SYMPTOMS	PROBABLE CAUSES	SUGGESTED REMEDIES
Starting motor does not crank	Steering control levers not in park brake position or switch not adjusted	Place steering control levers in park brake position or re-adjust switch
	Deck clutch switch engaged	Disengage clutch switch
	Weak or dead battery	Recharge or replace
	Electrical connections are corroded or loose	Check the electrical connections
	15 amp fuse is blown	Replace the 15 amp fuse
	For additional causes	See engine manual
The engine will not start, starts hard or fails to keep running	No fuel or line plugged	Fill tank or replace line (See *Fuel System* section for more details)
	There is incorrect fuel in the fuel system	Drain the tank and replace the fuel with the proper type
	There is dirt in the fuel filter	Replace the fuel filter
	Dirt, water or stale fuel in the fuel system	Contact your Dealer
	The choke is not on (if equipped)	Move the choke lever to ON
	Numerous	See engine manual
Engine: Runs with continuous misfiring or engine runs unevenly or erratically	Numerous	See engine manual
Loss of power or system will not operate in either direction	Restrictions in air cleaner	Service air cleaner
	Poor compression	Contact your Dealer
	Steering linkage needs adjustment	Adjust linkage
	Tow valve open	Close tow valve
	The traction drive belt is worn, loose or broken	Install a new traction drive belt
	For additional causes	See engine manual
Air cooled engine overheating	Air intake screen or cooling fins clogged	Clean screen and fins
	For additional causes	See engine manual
Low engine oil pressure	Low oil level	Add oil
	Oil diluted or too light	Change oil and check for source of contamination
	Failed oil pump	Contact your Dealer
High oil consumption	Numerous	Contact your Dealer
Mower jerky when starting or operates in one direction only	Steering control linkage needs adjustment	Adjust linkage
	Loose steering linkage	Tighten linkage
	Transaxle component faulty	Contact your Dealer

SYMPTOMS	PROBABLE CAUSES	SUGGESTED REMEDIES
Mower creeps when steering control levers are in neutral	Steering linkage needs adjustment	Adjust linkage
Mower circles or veers in one direction	Steering linkage needs adjustment	Adjust linkage
	Loose steering linkage	Tighten linkage
	Tires improperly inflated	Adjust air pressure to 55–83 KPa
	Transaxle component faulty	Contact your Dealer
Mower creeps when parking brake engaged	Steering linkage out of adjustment	Adjust steering linkage
	Brake cable damaged	Replace brake cable
There is abnormal vibration	The engine mounting bolts are loose	Tighten the engine mounting bolts
	The engine pulley, idler pulley or blade pulley is loose	Tighten the appropriate pulley
	The engine pulley is damaged	Contact your Dealer
	The cutting blade(s) is/are bent or unbalanced	Install new cutting blade(s)
	A blade mounting bolt is loose	Tighten the blade mounting bolt
	Spindle bearing is worn or loose	Replace or tighten spindle bearing
	A blade spindle is bent	Contact your Dealer
Blades do not rotate	The deck drive belt is worn, loose or broken	Install a new deck drive belt
	The deck drive belt is off the pulley	Install the deck drive belt and check for a reason
	Electric clutch is not engaging	Check and/or replace 15 amp fuse. Contact your Dealer
Uneven cutting height	The blade(s) are not sharp	Sharpen the blades
	A cutting blade(s) is/are bent	Install new cutting blade(s)
	The deck is not level	Level the deck per the *Deck leveling* section of the General Service Manual
	An anti-scalp wheel is not set correctly	Adjust the height of the anti-scalp wheel
	The underside of the deck is dirty	Clean the underside of the deck
	Tires improperly inflated	Adjust air pressure to 55–83 KPa
	A blade spindle is bent	Contact your Dealer
	Flex Forks® are installed	After initial break-in period, level the deck per the *Deck Leveling* section of the General Service Manual

EN

EN

STORAGE

When storing the unit at the end of the mowing season, the mower, engine, and battery should have the following items serviced before storage.

If the mower has been stored for an extended period of time, follow the new season preparation steps before beginning operation.

General mower preparation for storage

1. Remove all grass, dirt, and trash from mower and cutting units.

   IMPORTANT: Wash the machine with a mild detergent and water. Do not pressure wash the machine. Avoid excessive use of water, especially near the control panel and engine.
2. Clean mower and deck and touch up all scrapes with touch-up paint.
3. Install new air filter per *Engine Owner's Manual*.
4. Check thoroughly for any worn or damaged parts that need replacing and order them from your dealer.
5. Thoroughly lubricate machine, according to the *Maintenance* section.
6. Block mower up so weight is off tires. Check tire pressure and inflate to proper operating pressure.

   NOTE: Do not deflate tires.
7. Perform separate engine and battery preparation as listed below.
8. Store mower in a clean, dry place.

Preparation of engine for storage

If the mower is to be unused for an extended period of time (30 days or more), the engine will need to be prepared for storage. Use the following procedures before storing the mower.

IMPORTANT: Refer to the *Fuel Handling Precautions* section of this manual for important safety information before proceeding.

1. Add a Hustler® approved fuel stabilizer to the fuel system. Refer to the instructions shown on the fuel stabilizer bottle for proper usage. Hustler® Fuel Stabilizer with Cleaner is recommended. For detailed information consult with your Dealer.
2. Fill the fuel tank(s) with fresh fuel.

   NOTE: Use non-ethanol fuel if possible.

WARNING

To prevent carbon monoxide poisoning, operate the engine in a well ventilated area only.

3. Run the engine for a minimum of 10 minutes.

WARNING

Allow the engine to cool before changing the engine oil. Use caution when changing the engine oil as it will be very hot. You should wear the appropriate protective gear to avoid being burned or exposed to engine oil.

4. Drain the oil from the crankcase while the engine is still warm.
5. Replace the engine oil filter.
6. Refill with fresh oil of the proper viscosity. Hustler® Motor Oil is recommended.
7. Close the fuel shut-off valve (if equipped).
8. Check the oil filler cap and fuel tank cap(s) to make certain they are securely in place.
9. Refer to the engine manual for more information.

Preparation of battery for storage

When the machine is to be unused for long periods, it is best to disconnect the battery and remove it from the unit. At this time perform the following battery maintenance:

1. Remove the battery from machine.

   NOTE: Always **disconnect** the negative (black) battery cable(s) before disconnecting the positive (red) cable(s).
2. Clean the battery, terminals, and cable connectors.
3. Charge the battery, if necessary.
4. Store the battery in a cool, dry place (do not expose to freezing temperatures).
5. Always keep the battery fully charged. Especially important to prevent battery damage when the temperature is below 0°C.

New season preparation

Before starting the mower following post season storage, the following service is required:

1. Clean mower, removing trash and dirt accumulation.
2. Check engine oil level.
3. Install fully charged battery and attach the battery cables.
4. Fill fuel tank(s) with fresh fuel. Run machine at half speed for 5 minutes, checking operation of steering

EN

control levers. Stop engine and check for oil leaks, loose fittings and so forth.

WARNING

At start of new season always check that fresh oil has been added to machine. If oil is drained at season's end and not replaced, engine damage will result.

5. Tighten any bolts that have loosened and make sure all hair pins, cotter pins and clevis pins are in place.
6. Install all safety shields and review safety precautions listed in this manual.
7. Check and inflate tires to 55–83 KPa.
8. Refer to engine manual for more information.

EN

TECHNICAL SPECIFICATIONS

Hustler® Raptor® XD
Hustler® Raptor® XDX

	Guaranteed Sound Power Level	Operator Ear	* Engine RPM	** Vibration (Maximum weighted acceleration m/s2 - whole body)	Machine Mass	Nominal Engine Power	Cutting Width
Model No.	**dBA**	**dBA**	**RPM**	**m/s2**	**kg**	**kW**	**cm**
940510CE	105	91.3	3000 (± 50)	0.39	296	16.2	152
941500CE	105	91.5	2700 (± 50)	0.98	327	14.9	152
941518CE	103	90.4	2800 (± 50)	0.89	333	15.6	152
941492CE	105	91.75	2750 (± 50)	1.03	315	15.1	152
939819CE	100	86.6	2700 (± 50)	0.78	280	14.6	107
Sound Measurements (dBA)	Sound Power per Hemisphere method (EN ISO 3744 - 1995, 11094 - 1991, and EN ISO 3744:2010)						
*** IMPORTANT:**	Never alter or tamper with the engine speed (RPM) settings.						
*** Whole Body**	The acceleration value depends upon the roughness of the ground, the speed at which the mower is operating and the operator driving habits. Measurements were obtained through actual field data according to STD Procedure in ISO 2631-1-1997.						

Hand/Arm	These values were obtained through hand/arm measure per EN ISO 5349-1-2001.
Model No.	
940510CE	The RMS acceleration in m/s² measured in 24 seconds is less than 1.38 m/s².
941500CE	The RMS acceleration in m/s² measured in 24 seconds is less than 1.67 m/s².
941518CE	The RMS acceleration in m/s² measured in 24 seconds is less than 1.63 m/s².
941492CE	The RMS acceleration in m/s² measured in 24 seconds is less than 2.00 m/s².
939819CE	The RMS acceleration in m/s² measured in 24 seconds is less than 3.14 m/s².
Test was performed on a static (stationary) machine.	

EN

EN

INDEX

	PAGE
Air Flow Baffles	3-7
Air Restriction Indicator	4-5
Anti-Scalp Wheels	3-7
Battery Service Precautions	2-5
Belts	4-5
Children	2-4
Control Panel	3-1
Controls	3-1
Deck Clutch Operation	3-6
Deck Cutting Height Adjustment	3-7
Driving the Mower	3-3
Electrical System	4-1
Engine Air Filter	4-4
Engine Oil and Filter	4-4
Engine Starting	3-2
Flex Forks	3-6, 4-1
Fuel and Evaporative Emissions Control System	4-2
Fuel Evaporation System Filter	4-4
Fuel Handling Precautions	2-5
General Engine Maintenance	4-5
General Mower Preparation for Storage	6-1
Hydraulic System	4-2
Lubrication	4-1
Maintenance Locator Chart	4-10
Maintenance Record	4-12
Maintenance Table	4-11
Master In-Line Fuse	4-2
Model and Serial Number	1-1
Moving the Mower With Stalled Engine	3-3
Mower Blade Maintenance	4-5
Mower Blade Maintenance Precautions	2-5
Mower Blade Options	4-7
Mower Blade Replacement	4-6
Mower Blades	4-5
Mower Operation	3-3
New Season Preparation	6-1
Operating Suggestions	3-5
Operation	2-2
Parts and Service	1-2
Personal Safety	2-1
Preparation of Battery for Storage	6-1
Preparation of Engine for Storage	6-1
Product Literature	1-2
Safe Operating Practices	2-1, 3-1
Safe Operation	2-1
Safe Servicing Practices	4-1
Safety and Instructions Decals	2-6
Safety Start Interlock System	3-2
Seat Adjustment	4-7
Service Introduction	4-1
Service Precautions	2-4
Slope Guide	2-11
Slope Operation	2-3
Steering Control Lever Adjustment	4-7
Stopping the Engine	3-3
Tires	4-1
To the New Owner	1-1
Torque Values	4-1
Using a Ramp	2-3
Using This Manual	1-1
Warranty Registration	1-1

EN

EN